BID SET
AUGUST 2015

PLANT SCHEDULE

TREES

KEY	BOTANICAL NAME	COMMON NAME	PLANTING SIZE	SIZE AT MATURITY	QTY LP 400	QTY LP 600	QTY LP 700	TOTAL
	PINUS NIGRA	AUSTRIAN PINE	7' HT	40'H x 20' W	0	3	0	3
	JUNIPERUS SCOPULOROM	ROCKY MOUNTAIN JUNIPER	7' HT	30'H x 20' W	2	0	0	2
	EXISTING PLANTS							

SHRUBS

KEY	BOTANICAL NAME	COMMON NAME	PLANTING SIZE	SIZE AT MATURITY	QTY LP 400	QTY LP 600	QTY LP 700	TOTAL
	CERCOCARPUS LEDIFOLIUS	CURL LEAF MOUNTAIN MAHOGANY	#5	12'H. x 10'W.	7	2	0	9
	FORESTIERA NEOMEXICANA	NEW MEXICO PRIVET	#5	15'H. x 10'W.	5	2	0	7
	CHAMAEBATIARIA MILLEFOLIUM	FERNBUSH	#5	7'H. x 7'W.	3	7	0	10

GROUND PLANE

KEY	NAME	QTY LP 400	QTY LP 600	QTY LP 700	TOTAL
	ROCK MULCH – 1" – 2" OXROCK	2,465 SF	645 SF	0	3,110 SF
	SEED – SEE REVEGETATION SPECIFICATIONS LP102	0 SF	0 SF	695 SF	695 SF

NOTE: ALL DISTURBED AREAS SHALL EITHER BE COVERED WITH INERT MATERIAL (ROCK MULCH) OR REVEGETATED WITH SEED.

ENTIRE SHEET 1

REVISION	DESCRIPTION	BY	APP	DATE
1	ADDENDUM #2	BMS	BMS	8/26/15

WORK ORDER NO. 10-0002
DESIGNED BMS
DRAWN CJA
DATE AUGUST 2015
CHECKED
SUBMITTED
RECOMMENDED
APPROVED

TRUCKEE MEADOWS WATER AUTHORITY
1355 CAPITAL BLVD. / PO BOX 30013
RENO, NEVADA 89520-3013
PH 775-834-8080 / FX 775-834-8003

NOT REPRODUCIBLE
PROPERTY OF TRUCKEE MEADOWS WATER AUTHORITY, RETURN UPON COMPLETION OF PROJECT
(Per Homeland Security Act)

TMWA ARROWCREEK DROUGHT RESPONSE DESIGN PROJECT

PLANTING LEGEND

REGISTERED LANDSCAPE ARCHITECT BARBARA M. SANTINON 355 EXP. 6-30-16 STATE OF NEVADA
8/26/15

SHEET NUMBER
L001
55 OF 90

V:\20531\Active\20530017P\drawings\active\LANDSCAPE\L001.dwg By:Arroyo, Allison

BID SET
AUGUST 2015

PLANTING NOTES:

GENERAL:

1. PLAN IS DIAGRAMMATIC ONLY. ALL LOCAL GOVERNING CODES SHALL BE MET. EXACT LOCATION OF TREES AND SHRUBS SHALL BE DETERMINED IN THE FIELD (INSTALL AS PER DETAILS) AND APPROVED BY THE LANDSCAPE ARCHITECT OR OWNER'S REPRESENTATIVE.

2. A MINIMUM OF TWO WORKING DAYS BEFORE PERFORMING ANY DIGGING, CALL UNDERGROUND SERVICE ALERT FOR INFORMATION ON THE LOCATION OF NATURAL GAS LINES, ELECTRIC CABLES, TELEPHONE CABLES, ETC. THE CONTRACTOR SHALL BE RESPONSIBLE FOR LOCATION AND PROTECTION OF ALL UTILITIES, AND REPAIR OF ANY DAMAGE RESULTING FROM HIS WORK AT NO ADDITIONAL COST TO THE OWNER.

3. DAMAGES: CONTRACTOR SHALL PROMPTLY REPAIR ALL DAMAGES TO EXISTING SITE AT NO COST TO OWNER.

4. CONTRACTOR SHALL COORDINATE ALL WORK WITH OTHER TRADES (I.E., PAVING, PLUMBING, ELECTRICAL, ETC.)

5. THE CONTRACTOR SHALL BE RESPONSIBLE TO FIELD VERIFY SITE CONDITIONS PRIOR TO CONSTRUCTION AND TO NOTIFY THE LANDSCAPE ARCHITECT OR OWNER'S REPRESENTATIVE SHOULD CONDITIONS EXIST WHICH PREVENT CONSTRUCTION AS PER THESE PLANS. COMMENCEMENT OF WORK SHALL CONSTITUTE ACCEPTANCE OF CONDITIONS AND RESPONSIBILITY FOR CORRECTIONS.

6. CONTRACTOR AGREES THAT, IN ACCORDANCE WITH GENERALLY ACCEPTED CONSTRUCTION PRACTICES, CONTRACTOR ASSUMES SOLE AND COMPLETE RESPONSIBILITY FOR JOB SITE CONDITIONS DURING THE COURSE OF CONSTRUCTION OF THE PROJECT, INCLUDING SAFETY OF ALL PERSONS AND PROPERTY, THAT THIS REQUIREMENT SHALL BE MADE TO APPLY CONTINUOUSLY AND SHALL NOT BE LIMITED TO NORMAL WORKING HOURS, AND CONTRACTOR FURTHER AGREES TO DEFEND, INDEMNIFY AND HOLD HARMLESS THE OWNER FROM ANY AND ALL LIABILITY, REAL OR ALLEGED, IN CONNECTION WITH THE PERFORMANCE OF WORK ON THE PROJECT.

REQUIRED SEQUENCE:

1. THE CONTRACTOR SHALL BE RESPONSIBLE FOR FINISH GRADING THROUGHOUT ALL LANDSCAPE AREAS SUCH THAT THERE ARE NO HUMPS OR DEPRESSIONS AND POSITIVE DRAINAGE OCCURS THROUGHOUT. THE TOP 18" OF ALL PLANTING BEDS SHALL BE CLEAN NATIVE SOIL, FREE OF ALL CONSTRUCTION DEBRIS AND NATIVE ROCKS OVER 6" IN DIAMETER. THE CONTRACTOR SHALL AMEND THE PLANTING BED OR PLANTING HOLES PER PLANS AND SPECIFICATIONS. FINAL GRADE OF ALL PLANTERS (I.E. MULCH SURFACE) SHALL BE FLUSH WITH ADJACENT HARDSCAPE SURFACES.

2. THE CONTRACTOR SHALL OBTAIN SOIL TEST RESULTS AND RECOMMENDATIONS FOR EXISTING SITE SOIL INCLUDING: TEXTURE CLASSIFICATION, PH, NITROGEN, POTASSIUM, MAGNESIUM, CALCIUM, PHOSPHORUS, SODIUM HAZARD, SALINITY HAZARD, BORON HAZARD, CAT ION EXCHANGE, AND FERTILIZATION MINERALS RECOMMENDATION FOR THE INTENDED USE. CONTRACTOR SHALL UTILIZE SOIL TEST RESULTS AND RECOMMENDATIONS AND SHALL PROVIDE SOIL AMENDMENTS ACCORDINGLY. CONTRACTOR SHALL PROVIDE COPIES OF SOIL TEST RESULTS TO LANDSCAPE ARCHITECT OR OWNER UPON REQUEST. RECOMMENDED SOIL TESTING LABS: MDS HARRIS, 621 ROSE ST., LINCOLN, NE 98502, (402) 476-2811, SUNLAND ANALYTICAL LAB, 11353 PYRITES WAY, SUITE 4, RANCHO CORDOVA, CA 95670, (916)-852-8557. LTP.2 MAJOR LANDSCAPE EVALUATION WITH BORON.

3. INSTALL ALL PLANT MATERIALS AS PER DETAILS AND SOIL AND PLANT LAB REPORT. INSTALL SLOW RELEASE FERTILIZER TABLETS FOR ALL PLANTS. INFORMATION IN SOILS AND PLANT LAB REPORT SHALL PREVAIL OVER NOTES AND DETAILS.

4. PLANTING MIX-SOIL AMENDMENT SHALL BE TRIPLE MIX COMPOSED OF TOPSOIL, BARK HUMUS, AND COMPOST. SUBMIT TO LANDSCAPE ARCHITECT OR OWNER'S REPRESENTATIVE FOR APPROVAL PRIOR TO INSTALLATION.

5. ALL PLANTING AREAS TO RECEIVE THREE-INCH MINIMUM DEPTH OF ROCK OR DG MULCH, SEE PLANS. PRIOR TO PLACEMENT. SMOOTH AND COMPACT THE SUBGRADE TO 80% OF RELATIVE DENSITY. REMOVE WEEDS. INSTALL WOVEN WEED BARRIER FABRIC BENEATH ALL AREAS OF MULCH. LANDSCAPE FABRIC TO BE 'DEWITT' PRO-5 WEED BARRIER (OAE) INSTALLED IN ACCORDANCE WITH MFG'S SPECIFICATIONS. ANCHOR ALL EDGES PER MANUFACTURER'S SPECIFICATIONS.

6. APPLY PRE-EMERGENT HERBICIDE TO ALL AREAS RECEIVING ROCK MULCH AND DECOMPOSED GRANITE. APPLY AFTER IRRIGATION AND PLANTING ARE COMPLETED; BEFORE AND AFTER INSTALLATION OF ROCK MULCH MATERIAL.

7. CONTRACTOR IS RESPONSIBLE FOR PROVIDING PLANT MATERIAL PER SYMBOLS AND SPACING INDICATED ON PLAN AND IN LEGENDS. SYMBOLS PREVAIL OVER NUMBERS ON PLANT LIST. NO SUBSTITUTIONS WILL BE ACCEPTED WITHOUT EXPRESSED WRITTEN CONSENT OF THE LANDSCAPE ARCHITECT OR OWNER'S REPRESENTATIVE. SEE SUBMITTALS.

8. ALL PLANTS NOT MEETING OR EXCEEDING REQUIREMENTS AND RECOMMENDATIONS OF ANSI Z60.1 "AMERICAN STANDARD FOR NURSERY STOCK" SHALL BE REJECTED. CONTRACTOR SHALL RECEIVE ON-SITE APPROVAL OF PLANT MATERIAL BY LANDSCAPE ARCHITECT OR OWNER'S REPRESENTATIVE PRIOR TO PLANTING. FAILURE TO RECEIVE PRIOR APPROVAL MAY RESULT IN REJECTION OF PLANT MATERIAL AT ANY POINT DURING CONSTRUCTION OR THE PERIOD FOLLOWING INSTALLATION. THE OWNER'S REPRESENTATIVE RESERVES THE RIGHT TO INSPECT AND EVALUATE PLANTS DURING THE MAINTENANCE PERIOD. CONTRACTOR SHALL BE RESPONSIBLE FOR REPLACEMENT OF FAILED PLANTS.

9. ALL PLANT ROOTBALLS SHALL BE MOIST UPON ARRIVAL AT SITE AND KEPT THAT WAY THROUGH PLANTING AND APPROVAL OF FINAL WORKING IRRIGATION SYSTEM WITH WHATEVER MEANS NECESSARY INCLUDING; HAND WATERING, HOSE, WATER TRUCK, TEMPORARY IRRIGATION SYSTEM.

MAINTENANCE/GUARANTEES:

1. ALL PLANTED AREAS SHALL BE MAINTAINED FOR A PERIOD OF SIXTY DAYS FOLLOWING WRITTEN ACCEPTANCE BY OWNER'S REPRESENTATIVE. LANDSCAPE CONTRACTOR WILL GUARANTEE ALL PLANT MATERIAL (INCLUDING BUT NOT LIMITED TO TREES, SHRUBS, GROUND COVER, AND GRASSES) FOR A PERIOD OF ONE FULL YEAR FOLLOWING FINAL ACCEPTANCE OF THE LANDSCAPE INSTALLATION BY THE OWNER'S AUTHORIZED REPRESENTATIVE. IN BIDDING AND INSTALLING THE PLANT MATERIAL SPECIFIED ON THESE PLANS, THE LANDSCAPE CONTRACTOR AGREES THAT THE PLANT MATERIAL SPECIFIED IS SUITABLE TO THE PROJECT SITE. FURTHERMORE, THE LANDSCAPE CONTRACTOR AGREES TO HONOR THE WARRANTY AND, IF NECESSARY, REPLACE SPECIES WITH MORE HARDY PLANT TYPE IF DEEMED NECESSARY DUE TO EXCESSIVE DIE OUT. IF THE LANDSCAPE CONTRACTOR DOES NOT BELIEVE CERTAIN PLANT MATERIAL IS SUITABLE FOR THE SITE AND/OR ITS MICRO-CLIMATES, THE LANDSCAPE CONTRACTOR SHALL REQUEST TO MAKE PLANT MATERIAL SUBSTITUTIONS IN WRITING TO THE LANDSCAPE ARCHITECT PRIOR TO THE START OF INSTALLATION. PROPOSED SUBSTITUTIONS WILL RESULT IN NO ADDED COST.

TREE PLANTING NOTES;

1. REMOVE ALL NURSERY STAKES, TIES, AND TAGS ABOVE AND BELOW GROUND. TREES MUST STAND VERTICAL PRIOR TO STAKING TO BE ACCEPTABLE.

2. TREES GROWN STAKED IN A NURSERY WILL NOT BE ACCEPTED ON THIS PROJECT UNLESS STAKES HAVE BEEN REMOVED FOR A MINIMUM OF TWO YEARS BEFORE THE TREES ARE DUG FROM THE NURSERY. A CERTIFICATION OF THIS CONDITION WILL BE PROVIDED AT OR BEFORE DELIVERY OF TREES TO THE SITE.

PLANTING NOTES: (CONTINUED)

2.
3. REMOVE DAMAGED BRANCHES, RETAIN NATURAL GROWTH SHAPE CHARACTERISTICS OF SPECIES. DO NOT REMOVE OR CUT CENTRAL LEADER OR ANY LOWER BRANCHES. TREES WITH DAMAGED OR CUT CENTRAL LEADERS WILL NOT BE ACCEPTED. CUT STAKES IF NEEDED, TO PREVENT WIND DAMAGE TO LOWER BRANCHES. PRUNE ACCORDING TO CLASS 1 OR 11 STANDARDS OF THE NATIONAL ARBORISTS ASSOCIATION.

4. TOP OF ROOT BALL IS DEFINED AT THE LOCATION OF THE UPPERMOST LATERAL ROOT, NOT THE SOIL LEVEL IN THE PLANT CONTAINER. TOP OF ROOT BALL TO BE 1" ABOVE EXISTING GRADE - NO NATIVE SOIL TO BE PLACED ON TOP OF ROOT BALL.

5. CONDITIONS THAT WILL NOT BE ACCEPTED: TRUNK OR BARK WOUNDS; KINKED, GIRDLING, CIRCLING OR J ROOTS.

6. DIG SQUARE OR RECTANGULAR HOLES FOR OPTIMUM ROOT GROWTH. SCARIFY EDGES OF PLANT HOLE: DEPTH TO BE SUCH THAT TREE CAN BE PLANTED AT SAME RELATIONSHIP TO FINISH GRADE AS GROWN OR 1" ABOVE.

7. DIG PILOT HOLES FOR STAKES WITH ROTO-HAMMER INTO UNDISTURBED SOIL. PRESET STAKES IN EMPTY HOLES USING (2) 2" DIA. LODGE POLE PINE STAKES, AFTER TREE IS LOWERED INTO HOLE AND SET.

8. USE STRAPS OR HOOKS CONNECTED TO ROOTBALL OR WIRE BASKET TO LOWER TREE INTO HOLE. SET AND PLUM TREE FIRST, THEN USING BOLT CUTTERS AND UTILITY KNIFE REMOVE WIRE BASKET AND BURLAP TO BOTTOM OF ROOT BALL.

9. BACKFILL HOLE WITH PLANTING MIX IN LAYERS, TAMP SOIL AT 50% TOTAL BACKFILL DEPTH AND WATER/SOAK BEFORE ADDING MORE SOIL. ROOTBALL SHALL NOT TO BE ALLOWED TO DRY OUT, EITHER BEFORE, DURING OR AFTER PLANTING.

10. MINERAL SUPPLEMENTS SHALL BE ADDED TO SOIL AMENDMENTS PER RECOMMENDATION BASED ON SOIL ANALYSIS.

11. BACKFILL W/PLANTING MIX OF NATIVE SOIL AND SOIL AMENDMENT. MIX SOIL AMENDMENT TO NATIVE SOIL AT 1:3 RATIO. NATIVE SOIL TO BE SCREENED FREE OF ROCKS, CLODS, AND DEBRIS GREATER THAN 6" DIAMETER. TAMP TO REMOVE AIR POCKETS.

12. CONSTRUCT WATER BASIN AROUND PERIMETER OF EXCAVATED PIT. GRADE BASIN SUCH THAT WATER COLLECTS AT THE EDGE OF BASIN, NOT AT TRUNK. FILL BASIN W/WOOD CHIP MULCH PER PLAN & SPECS. KEEP BARK 4" AWAY FROM TRUNK. DO NOT COVER TRUNK COLLAR WITH MULCH.

13. CINCH BELT SECURE TO WOODEN STAKE WITH GALVANIZED NAIL DRIVEN THROUGH THE CINCH-BELT AND INTO THE STAKE TO PREVENT SLIPPAGE. FOR ATTACHMENT TO METAL STAKE WRAP AROUND TREE TRUNK AND DOUBLE-WRAP STAKE TO PREVENT SLIPPAGE. DO NOT USE WIRE OR CRIMP HOSE AROUND TRUNK.

OBSERVATIONS/APPROVALS/SUBMITTALS:

1. CONTRACTOR IS RESPONSIBLE FOR NOTIFYING LANDSCAPE ARCHITECT OR OWNER'S REPRESENTATIVE, A MINIMUM OF 48 HOURS IN ADVANCE, FOR THE FOLLOWING SITE OBSERVATIONS AND/OR MEETINGS:
   A. PRECONSTRUCTION MEETING WITH ALL PARTIES
   B. PLANTING PIT EXCAVATION, PRIOR TO INSTALLATION
   C. BOULDER LOCATIONS STAKED OUT, PRIOR TO PLACEMENT (IF SPECIFIED)
   D. PLANT MATERIAL ON SITE, PRIOR TO INSTALLATION
   E. PLANT LOCATIONS STAKED OUT, PRIOR TO PLANTING
   F. SITE FURNISHINGS, PRIOR TO INSTALLATION (IF SPECIFIED)
   G. FINAL PROJECT WALK-THROUGH
   H. ADDITIONAL SITE OBSERVATIONS AS DEEMED NECESSARY BY THE LANDSCAPE ARCHITECT AND/OR CONTRACTOR

2. SUBMIT THE FOLLOWING SAMPLES TO LANDSCAPE ARCHITECT OR OWNER'S REPRESENTATIVE FOR APPROVAL PRIOR TO INSTALLATION. ADDITIONAL SAMPLES MAY BE REQUIRED PRIOR TO FINAL APPROVAL. FAILURE TO COMPLY MAY RESULT IN REJECTION OF ITEM(S) PRIOR TO OR FOLLOWING INSTALLATION.
   A. PLANTING MIX
   B. SOIL/AMENDMENT TESTS
   C. FERTILIZER TABLETS
   D. WOOD CHIPS
   E. ROCK MULCH
   F. DECOMPOSED GRANITE & AGGREGATE
   G. TREE TIES & STAKES
   H. WEED BARRIER FABRIC
   I. BOULDERS

3. IT IS THE RESPONSIBILITY OF THE CONTRACTOR TO LOCATE AND PROVIDE PLANT MATERIAL AS SPECIFIED ON THIS PLAN. THE CONTRACTOR MAY SUBMIT A REQUEST TO PROVIDE SUBSTITUTIONS FOR THE SPECIFIED PLANT MATERIAL UNDER THE FOLLOWING CONDITIONS:
   A. ANY SUBSTITUTIONS PROPOSED SHALL BE SUBMITTED TO THE PROJECT LANDSCAPE ARCHITECT WITHIN TWO WEEKS OF THE AWARD OF CONTRACT. SUBSTITUTIONS MUST MEET EQUIVALENT DESIGN AND FUNCTIONAL GOALS OF THE ORIGINAL MATERIALS AS DETERMINED BY THE LANDSCAPE ARCHITECT OR OWNERS REPRESENTATIVE. ANY CHANGES MUST HAVE THE APPROVAL OF THE LANDSCAPE ARCHITECT.
   B. THE REQUEST WILL BE ACCOMPANIED BY AT LEAST THREE NOTICES FROM PLANT MATERIAL SUPPLIERS THAT THE PLANT MATERIAL SPECIFIED IS NOT AVAILABLE AND WILL NOT BE AVAILABLE PRIOR TO CONSTRUCTION.

4. SUBMIT REQUIRED SOIL REPORT, AND SAMPLE OF PROPOSED SOIL AMENDMENTS TO LANDSCAPE ARCHITECT PRIOR TO INSTALLATION.

5. RECORD (AS-BUILT) DRAWINGS: FOLLOWING COMPLETION OF PROJECT INSTALLATION, AND PRIOR TO FINAL APPROVAL, CONTRACTOR SHALL PREPARE AND SUBMIT RECORD DRAWINGS DEPICTING A COMPLETE LANDSCAPE AND IRRIGATION INSTALLATION. PROCURE FROM LANDSCAPE ARCHITECT FULL-SIZE CONTRACT DRAWINGS. CONSTRUCTION DRAWINGS SHALL BE ON THE PROJECT SITE AT ALL TIMES DURING INSTALLATION. CONTRACTOR SHALL MAKE A DAILY RECORD OF ALL WORK INSTALLED DURING EACH DAY. ACTUAL LOCATION OF TREES AND SHRUB BEDS, IRRIGATION VALVES, AND ALL IRRIGATION AND DRAINAGE PIPING SHALL BE SHOWN ON THE PRINTS BY DIMENSIONS FROM EASILY IDENTIFIED PERMANENT FEATURES, SUCH AS BUILDINGS, CURBS, FENCES, WALKS, OR PROPERTY LINES. DRAWINGS SHALL SHOW MANUFACTURER'S NAME AND CATALOG NUMBER. THE DRAWINGS SHALL BE TO SCALE. ALL INFORMATION NOTED ON THE PRINT SHALL BE TRANSFERRED TO THE COPIES BY CONTRACTOR AND ALL INDICATIONS SHALL BE RECORDED IN A NEAT, ORDERLY WAY. THE RECORD DRAWING SHALL BE TURNED OVER TO THE LANDSCAPE ARCHITECT, OR OWNER'S REPRESENTATIVE.

ENTIRE SHEET 1

REVISION	DESCRIPTION	BY	APP	DATE
1	ADDENDUM #2	BMS	BMS	8/26/15

WORK ORDER NO. 10-0002
DESIGNED BMS
DRAWN CJA
DATE AUGUST 2015
CHECKED
SUBMITTED
RECOMMENDED
APPROVED

TRUCKEE MEADOWS WATER AUTHORITY
1355 CAPITAL BLVD. / PO BOX 30013
RENO, NEVADA 89520-3013
PH 775-834-8080 / FX 775-834-8003

NOT REPRODUCIBLE
PROPERTY OF TRUCKEE MEADOWS WATER AUTHORITY, RETURN UPON COMPLETION OF PROJECT
(Per Homeland Security Act)

TMWA ARROWCREEK DROUGHT RESPONSE DESIGN PROJECT

PLANTING NOTES

REGISTERED LANDSCAPE ARCHITECT
BARBARA M. SANTNER
355
EXP. 6.30.16
STATE OF NEVADA
8/18/15

SHEET NUMBER
L002
56 OF 90

V:\2053\Active\205300179\drawings\active\LANDSCAPE\00179_L002-003.dwg By:Araya, Allison
TMWA_Map5mono.ctb

BID SET
AUGUST 2015

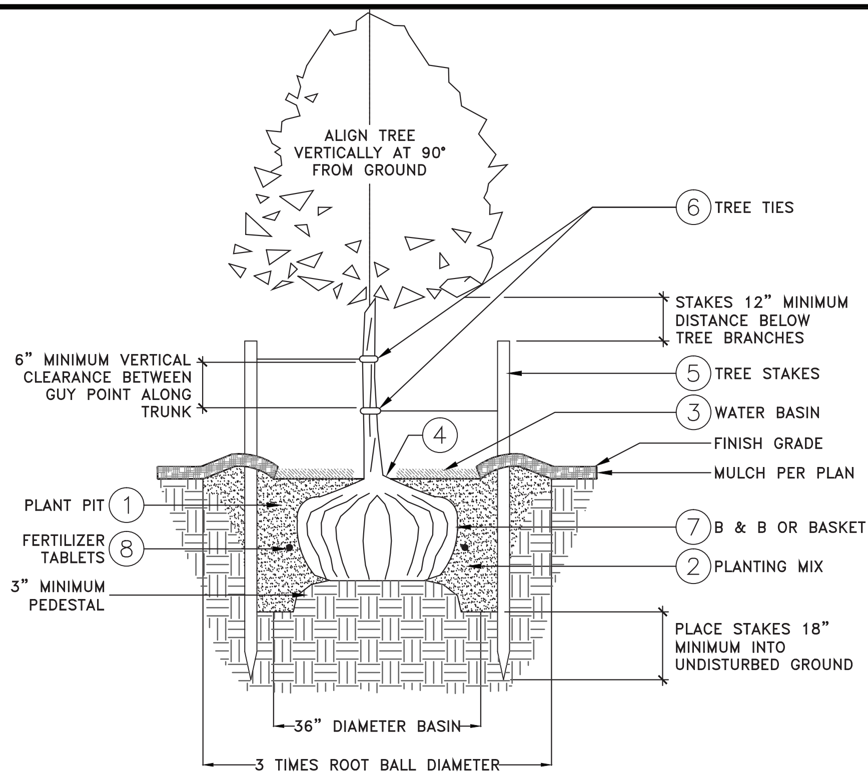

NOTES:

1. PLANT PIT: SCARIFY EDGES OF PLANT HOLE. PEDESTAL DEPTH TO BE SAME AS DEPTH OF ORIGINAL PLANT CONTAINER.
2. PLANTING MIX: 1/3 TRIPLE MIX TO 2/3 NATIVE SITE SOIL. THOROUGHLY BLEND PRIOR TO PLACEMENT.
3. WATER BASIN: 4" DEEP, FILL W/4" DEPTH SHREDDED BARK, KEEP BARK 4" FROM TRUNK.
4. TREE CROWN OR ROOT FLARE: PLANT 1" ABOVE GRADE. NO NATIVE SOIL TO BE PLACED ON TOP OF ROOT BALL.
5. TREE STAKES: (2) 2" DIA. X 8' LODGE POLE TREE STAKES – STAKE INTO UNDISTURBED SOIL OUTSIDE ROOTBALL, PERPENDICULAR TO PREVAILING WINDS.
6. TREE TIES: CINCH BELT – LEAVE 12" CLEAR BETWEEN ROOT BALL AND STAKE ON ALL SIDES. STAKE TO IMMOBILIZE ROOT BALL.
7. B & B OR BASKET: TURN DOWN TOP 1/3 TO 1/2 BURLAP ON B&B MATERIAL. COMPLETELY REMOVE WIRE BASKET.
8. FERTILIZER TABLETS: "BEST" SLOW RELEASE 16–16–16 ALL PURPOSE FERTILIZER (OAE). INSTALL PER MFG'S APPLICATION RATES FOR NEW PLANTINGS.
9. REMOVE ALL NURSERY STAKES, TIES AND TAGS. TREES MUST STAND UPRIGHT TO BE ACCEPTABLE. SEE NURSERY STOCK QUALITY STANDARDS. ALL TREES SHALL BE STAKED SO AS TO REMAIN UPRIGHT AND PLUMB FOLLOWING INSTALLATION.
10. REMOVE DAMAGED BRANCHES. DO NOT REMOVE CENTRAL LEADER OR ANY LOWER BRANCHES.
11. GRADE WATERING BASIN SUCH THAT WATER COLLECTS AT EDGE OF ROOT BALL, NOT AT TRUNK.
12. THOROUGHLY WATER IMMEDIATELY AFTER PLANTING.
13. ORIENT GRAFT UNION TO FACE NORTH.

*TOP OF ROOT BALL IS DEFINED AS THE LOCATION OF THE UPPERMOST LATERAL ROOT NOT THE SOIL LEVEL IN THE PLANT CONTAINER

1 / L002 TREE PLANTING

SCALE: NOT TO SCALE

PROJ–INWELL–01

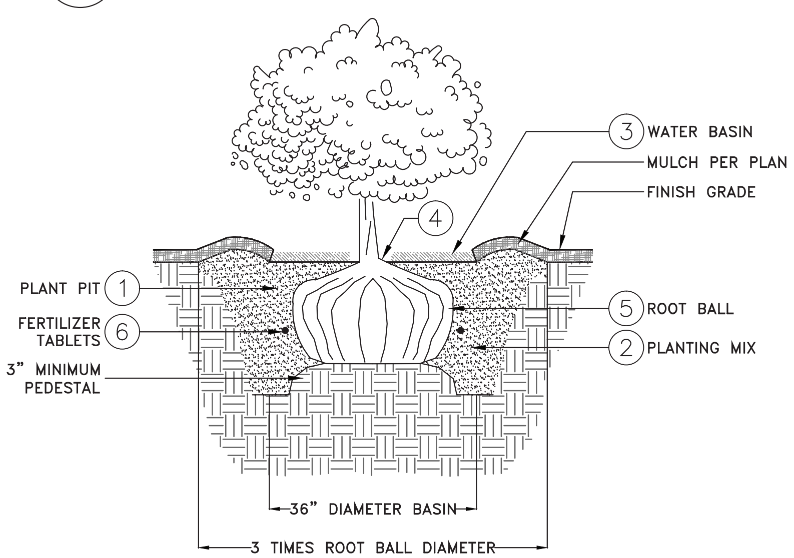

NOTES:

1. PLANT PIT.
2. PLANTING MIX: 1/3 TRIPLE MIX TO 2/3 NATIVE SITE SOIL. THOROUGHLY BLEND PRIOR TO PLACEMENT.
3. WATER BASIN: 3" DEEP, FILL W/4" DEPTH SHREDDED BARK, KEEP BARK 4" FROM TRUNK.
4. PLANT CROWN OR ROOT FLARE: 10% ABOVE GRADE.
5. ROOT BALL.
6. FERTILIZER TABLETS: "BEST" SLOW RELEASE 16–16–16, ALL PURPOSE FERTILIZER (OAE). INSTALL PER MFG'S APPLICATION RATES FOR NEW PLANTINGS.

2 / L002 SHRUB PLANTING

SCALE:

PROJ–INWELL–02

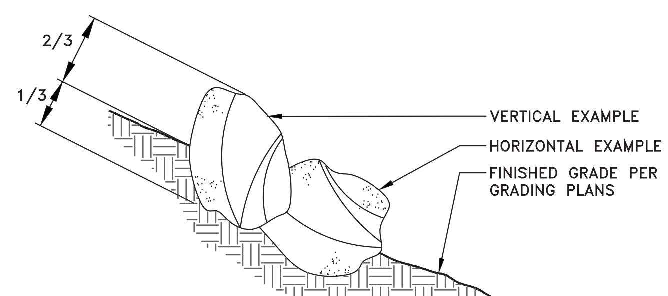

NOTES:

1. PLACE 1/3 OF THE TOTAL DIAMETER BELOW FINISHED GRADE.
2. STAKE BOULDER LOCATIONS AS SHOWN ON PLAN. LANDSCAPE ARCHITECT TO REVIEW PRIOR TO PLACEMENT.
3. REFER TO GEOTECHNICAL RECOMMENDATIONS WHERE APPLICABLE.
4. "V" REFERS TO VERTICAL PLACEMENT.
5. "H" REFERS TO HORIZONTAL PLACEMENT.

3 / L002 BOULDER PLACEMENT

SCALE: NOT TO SCALE

REVEGETATION & TOPSOIL SALVAGE SPECIFICATIONS:
TOPSOIL MIXTURE SALVAGE, STOCKPILING & PLACEMENT, SOIL TESTING:

1. LOCATE AND STAKE AREA TO RECEIVE REVEGETATION PRIOR TO DISTURBANCE.
2. PRIOR TO DISTURBANCE SALVAGE TOPSOIL OVER AREA TO RECEIVE REVEGETATION SEEDING. TOPSOIL MIXTURE CONSISTS OF THE TOP 6" OF NATIVE SOIL, BROKEN–UP VEGETATION AND ROCK MATERIALS DERIVED FROM THE SITE AREA TO RECEIVE REVEGETATION, AS MEASURED VERTICALLY FROM THE UNDISTURBED AREA. DO NOT SUBSTITUTE MATERIAL DERIVED FROM DEEPER SEGMENTS OR MATERIAL FROM OUTSIDE OF THE PROJECT LIMITS WITHOUT APPROVAL. BREAK THE VEGETATION INTO PIECES LESS THAN 12" IN THE LONGEST DIRECTION AND MECHANICALLY SEPARATE THE TOPSOIL MIXTURE THAT DOES NOT PASS THROUGH A 12" SQUARE SCREEN. PRIOR TO APPLYING SALVAGED TOPSOIL MIXTURE REMOVE MATERIAL LARGER THAN 12" AND DO NOT REINTRODUCE THIS MATERIAL TO THE TOPSOIL RESERVES.
3. STOCKPILE TOPSOIL MIXTURE ON SITE WITHOUT DAMAGING EXISTING VEGETATION TO REMAIN. DO NOT STOCKPILE TOPSOIL MIXTURE MORE THAN 2' IN HEIGHT AND DO NOT COMPACT STOCKPILES. STABILIZE STOCKPILES OF TOPSOIL THAT ARE IN PLACE FOR LESS THAN 1 MONTH WITH WATER OR DUST PALLIATIVE (DUST PALLIATIVE MUST NOT INHIBIT VEGETATIVE GROWTH). FOR TOPSOIL STOCKPILES IN PLACE MORE THAN 1 MONTH, APPLY REVEGETATIVE TREATMENT TO THE STOCKPILE CONSISTING OF SAME HYDROSEEDING DESCRIBED IN THIS SPECIFICATION. THERE SHALL BE NO PAY ITEM OR CLAIM FROM THE CONTRACTOR FOR THE RESTORATION OF DISTURBED AREAS BEYOND THOSE DESIGNATED ON THE PLANS FOR REVEGETATION OR IN THE FIELD.
4. AFTER GRADING, TRANSPORT TOPSOIL MIXTURE FROM THE STOCKPILE LOCATION AND PLACE IN ALL AREAS TO BE REVEGETATED. ROUGHEN SURFACE TO RECEIVE TOPSOIL MIXTURE TO PROVIDE ADHERENCE. IF SOILS HAVE BEEN COMPACTED, LOOSEN TO A DEPTH OF 4" – 6".
5. APPLY TOPSOIL MIXTURE WITH EQUIPMENT THAT ALLOWS FOR UNIFORM SPREADING. DO NOT BULK END DUMP THE TOPSOIL MIXTURE. AFTER PLACING TOPSOIL MIXTURE TRACK WALK ALONG THE SURFACE, PERPENDICULAR TO THE SLOPE/CONTOURS. DO NOT COMPACT SURFACE AND PRODUCE A NON–UNIFORM, ROUGHENED SURFACE TEXTURE OF SMALL UNDULATIONS. TRACK UNTIL NO CLODS OVER 3 INCHES IN DIAMETER REMAIN. OBTAIN APPROVAL FROM LANDSCAPE ARCHITECT OR OWNER'S REPRESENTATIVE PRIOR TO SEEDING.
6. SOIL TESTING – AFTER FINAL TOPSOIL PLACEMENT HAS BEEN COMPLETED AND AT LEAST 60 DAYS PRIOR TO SEEDING PROVIDE SOIL TESTS TO THE LANDSCAPE ARCHITECT FOR SOIL AMENDMENT RECOMMENDATIONS. PROVIDE 2 COMPOSITE SOIL SAMPLES PER ACRE OF REVEGETATION AREA FOR THE TYPE OF REVEGETATION SEEDING TO TAKE PLACE. USE A SOIL LABORATORY APPROVED BY LANDSCAPE ARCHITECT. OBTAIN SAMPLES ACCORDING TO LAB PROTOCOL AND AT LOCATIONS APPROVED BY THE LANDSCAPE ARCHITECT. PROVIDE ANALYSES TO THE LANDSCAPE ARCHITECT. UPON REVIEW OF THE ANALYSES THE LANDSCAPE ARCHITECT MAY MODIFY THE CURRENT AMENDMENT SPECIFICATIONS TO INCLUDE ADDITIONAL AMENDMENTS AND/OR ORGANIC MATERIAL. ONCE SOIL AMENDMENT EVALUATION HAS BEEN COMPLETED BY THE LANDSCAPE ARCHITECT, INCORPORATE ADDITIVES AT THE NEW RATES SPECIFIED.
7. SEEDED REVEGETATION MAY TAKE PLACE BETWEEN SEPTEMBER 15 AND DECEMBER 15 UNLESS TEMPORARY IRRIGATION/WATERING IS PROVIDED.
8. ALL AREAS DISTURBED BY CONSTRUCTON SHALL RECEIVE SEEDED REVEGETATION PER THIS SHEET UNLESS OTHERWISE NOTED.

SUBMITTALS:

30 DAYS PRIOR TO CONSTRUCTION SUBMIT MATERIALS LABELS AND RATES OF APPLICATION TO LANDSCAPE ARCHITECT FOR APPROVAL.
1. SEED MIX LABELS
2. SOIL INOCULANTS AND TEST RESULTS
3. MULCH
4. TACKIFIER
5. SOIL TEST RESULTS
6. SOIL AMENDMENT
7. PROPOSED SCHEDULE FOR CONSTRUCTION.

SEEDED REVEGETATION MATERIALS:

1. REVEGETATION SEED MIX

BOTANICAL NAME	COMMON NAME/VARIETY	PLS LBS/ACRE
ACHILLEA MILLEFOLIUM	YARROW	0.10
ACHNATHERUM HYMENOIDES	INDIAN RICEGRASS "NEZPAR/NATIVE"	2.50
AGROPYRON FRAGILE SSP. SIBERICUM	SIBERIAN WHEATGRASS	2.00
CHRYSOTHAMNUS NAUSEOSUS	RABBITBRUSH	0.90
ATRIPLEX CANESCENS	FOUR–WING SALTBRUSH	2.00
ELYMUS CINEREUS	GREAT BASIN WILDRYE	2.50
ELYMUS TRACHYCAULUS	SLENDER WHEATGRASS	2.50
EPHEDRA VIRIDIS	MORMON TEA GREEN	0.50
ERIOGONUM UMBELLATUM	SULFUR FLOWER BUCKWHEAT	0.50
FESTUCA OVINA	SHEEP FESCUE "COVAR"	2.00
GRAYIA SPINOSA	SPINEY HOPSAGE	0.50
JUNIPERUS OCCIDENTALIS	WESTERN JUNIPER	0.50
KOCHIA PROSTRATA	PROSTRATE SUMMER CYPRESS	0.25
LINUM LEWISII	BLUE FLAX	0.50
LUPINUS AGRENTEUS/CAUDATUS	SILVERLEAF LUPINE	0.25
PENSTEMON PALMERI	PALMER PENSTEMON	0.50
POA SECUNDA	SANDBERG BLUEGRASS	2.00
PSUEDOROEGNERIA SPICATA	BLUEBUNCH WHEATGRASS"SECAR"	3.00
PURSHIA TRIDENTATA	BITTERBRUSH	1.00
SPHAERALCEA MUNROANA	GLOBEMALLOW	0.50
	CEREAL BARLEY	5.00
TOTAL		29.5

1. SOIL INOCULANTS – MYCORRHIZAL INOCULANTS SHALL CONSIST OF SPORES, MYCELLIM AND MUYCORRHIZAL ROOT FRAGMENTS IN A SOLID CARRIER SUITABLE OR HANDLING BY DRY ORIGINALLY PRODUCED AND MAY INCLUDE ORGANIC MATERIALS, VERMICULITE, PERLITE OR OTHER APPROVED MATERIALS CONSISTENT WITH PROPER APPLICATION AND GOOD PLANT GROWTH. EACH ENDOMYCORRHIZAL NOCULUM SHALL CARRY A SUPPLIER'S GUARANTEE OF NUMBER OF PROPAGULES IMUM GLOMUS AGGREGATUM. THE INOCULA SHALL CONTAIN AT A MINIMUM OF 120 SPORES PER GRAM. TRANSPORT AND STORE INOCULA IN AREAS WITH TEMPERATURE OF LESS THAN 90 DEGREES F. USE A DUST MASK WHEN HANDLING MATERIAL. APPLY AT 60 BS/ACRE.
2. MULCH– USE WOOD FIBER MULCH OF DEGRADABLE WOOD–CELLULOSE FIBER OR 100% RECYCLED LONG–FIBER PULP FREE OF WEEDS OR OTHER FOREIGN MATTER TOXIC TO PLANT GROWTH. APPLY AT 2,000 LBS/ACRE.
3. TACKIFIER – MATERIALS SHALL BE OR ORGANIC, PLANT DERIVED SUBSTANCED SUCH AT SUPERTAK, M–BINDER, ECO–TAK OR APPROVED EQUAL AND SHALL CONTAIN NO AGENTS TOXIC TO SEED GERMINATION. APPLY AT 150 LBS/ACRE.
4. SOIL AMENDMENT – SHALL BE KIWI POWER OR APPROVED EQUAL. APPLY AT 5 GALLONS/ACRE. ADDITIONAL AMENDMENTS MAY BE REQUIRED BASED ON SOIL TEST RECOMMENDATIONS.

SEEDED REVEGETATION CONSTRUCTION:

1. PREPARE SOILS BY LOOSENING SOILS TO 6" MINIMUM DEPTH.
2. BROADCAST SEED MIXTURE.
3. BROADCAST SOIL INOCULANTS AND SOIL AMENDMENTS. WITH RAKE OR HARROW.
4. INCORPORATE TO A DEPTH OF 3".
5. APPLY MULCH AND TACKIFIER ON SURFACE.
6. DO NOT APPLY IN WINDY CONDITIONS (GREATER THAN 8 MPH). SEED MUST NOT BE LEFT UNCOVERED MORE THAN 24 HOURS.
7. ALL SEEDED REVEGETATION CONSTRUCTION SHALL TAKE PLACE UNDER THE OBSERVATION OF THE LANDSCAPE ARCHITECT OR OWNER'S REPRESENTATIVE. PROVIDE 48 HOURS NOTICE TO LANDSCAPE ARCHITECT FOR OBSERVATION.

PERFORMANCE STANDARD AND ACCEPTANCE:

REVEGETATED AREAS WILL BE INSPECTED AT COMPLETION OF INSTALLATION AND ACCEPTED SUBJECT TO COMPLIANCE WITH SPECIFIED MATERIALS AND INSTALLATION REQUIREMENTS. SEVENTY PERCENT (70%) OF PRE–DISTURBANCE NATIVE PLANT COVER MUST BE ACHIEVED BEFORE THE NOTICE OF TERMINIATION (NOT) CAN BE ISSUED WITHIN 1 YEAR OF CONSTRUCTION. CONTRACTOR MUST GUARANTEE AND MAINTAIN THE PROJECT UNTIL FINAL ACCEPTANCE BY OWNER. IF ADEQUATE COVERAGE IS NOT ACHIEVED, THE CONTRACTOR MAY BE REQUIRED TO RE–SEED, RE–SOIL AMEND, AND/OR RE–MULCH. THE OWNER'S REPRESENTATIVE WILL MAKE FINAL INSPECTION AND ACCEPTANCE AT THE CONCLUSION OF THE MAINTENANCE PERIOD. PROVIDE NOTIFICATION AT LEAST 10 WORKING DAYS BEFORE REQUESTED INSPECTION DATE.

ENTIRE SHEET 1

F

REVISION	DESCRIPTION	BY	APP	DATE
1	ADDENDUM #2	BMS	BMS	8/26/15

WORK ORDER NO. 10–0002
DESIGNED BMS
DRAWN CJA
DATE AUGUST 2015
CHECKED
SUBMITTED
RECOMMENDED
APPROVED

TRUCKEE MEADOWS WATER AUTHORITY
1355 CAPITAL BLVD. / PO BOX 30013
RENO, NEVADA 89520–3013
PH 775–834–8080 / FX 775–834–8003

NOT REPRODUCIBLE
PROPERTY OF TRUCKEE MEADOWS WATER AUTHORITY, RETURN UPON COMPLETION OF PROJECT
(Per Homeland Security Act)

TMWA ARROWCREEK DROUGHT RESPONSE DESIGN PROJECT

PLANTING DETAILS & REVEGETATION SPECIFICATIONS

REGISTERED LANDSCAPE ARCHITECT BARBARA M. SANTNER 355 STATE OF NEVADA EXP 6-30-16 8/18/15

SHEET NUMBER
L003
57 OF 90

V:\2053\Active\205300179\drawings\active\LANDSCAPE\00179_L002-003.dwg By:Araya, Allison

BID SET
AUGUST 2015

IRRIGATION SCHEDULE

SYMBOL	MANUFACTURER/MODEL/DESCRIPTION
	RAIN BIRD 100-DVF VALVE AND PRF-100-RBY 1" LOW FLOW DIAPHRAGM VALVE, 1" PRESSURE REGULATING RBY FILTER. FLOW RANGE 0.2GPM-40GPM.
	AREA TO RECEIVE DRIP EMITTERS RAIN BIRD PC-05 SINGLE OUTLET, PRESSURE COMPENSATING DRIP EMITTERS WITH BARB INLET/OUTLET. EMITTER NOTES: TREES = FOUR (4) 5.0 GPH EMITTERS 5 GAL SHRUB = TWO (2) 5.0 GPH EMITTERS
F	RAIN BIRD MDCFPCAP (NOT SHOWN ON PLAN) DRIPLINE FLUSH VALVE. CAP IN COMPRESSION FITTING COUPLER. INSTALL IN VALVE BOX. LOCATE AT ENDS OF DRIP TUBE.
SYMBOL	MANUFACTURER/MODEL/DESCRIPTION
	RAIN BIRD 44-LRC 1" BRASS QUICK-COUPLING VALVE, WITH CORROSION-RESISTANT STAINLESS STEEL SPRING, LOCKING THERMOPLASTIC RUBBER COVER, AND 2-PIECE BODY.
	ISOLATION VALVE CURB STOP VALVE, SAME SIZE AS PIPE DIAMETER.
D	MAIN LINE MANUAL DRAIN VALVE WATTS 3/4" BRASS GATE VALVE WITH CROSS TOP INSTALL DRAIN VALVE AT EACH REMOTE CONTROL VALVE, SEE IRRIGATION DETAILS
EX C	EXISTING CONTROLLER
P.O.C. 1"	POINT OF CONNECTION 1"
	IRRIGATION LATERAL LINE: PVC CLASS 200 SDR 21
	IRRIGATION MAINLINE: PVC SCHEDULE 40
	PIPE SLEEVE: PVC SCHEDULE 40 PIPE SLEEVE SIZE SHALL 2 X THE DIAMETER OF ALL PIPE AND WIRING BEING SLEEVED. EXTEND SLEEVES 12 INCHES BEYOND EDGES OF PAVING OR CONSTRUCTION.

VALVE CALLOUT

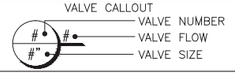

NOTES:
1. PULL FOUR (4) EXTRA VALVE WIRES AND ONE (1) COMMON WIRE TO DRIP VALVE BOX AND BUNDLE FOR FUTURE USE.

GENERAL NOTES:

1. LANDSCAPE SPECIFICATIONS: USE PROJECT SPECIFICIATIONS AND DETAIL SHEETS LI101 AND LI102. IF NO SPECIFICATION OR DETAIL IS PROVIDED, CITY OF RENO ORANGE BOOK SHALL BE UTILIZED.

ENTIRE SHEET 1

REVISION	DESCRIPTION	BY	APP	DATE
1	ADDENDUM #2	BMS	BMS	8/26/15

WORK ORDER NO. 10-0002
DESIGNED BMS
DRAWN CJA
DATE AUGUST 2015
CHECKED
SUBMITTED
RECOMMENDED
APPROVED

TRUCKEE MEADOWS WATER AUTHORITY
1355 CAPITAL BLVD. / PO BOX 30013
RENO, NEVADA 89520-3013
PH 775-834-8080 / FX 775-834-8003

NOT REPRODUCIBLE
PROPERTY OF TRUCKEE MEADOWS WATER AUTHORITY, RETURN UPON COMPLETION OF PROJECT
(Per Homeland Security Act)

TMWA ARROWCREEK DROUGHT RESPONSE DESIGN PROJECT

IRRIGATION LEGEND

REGISTERED LANDSCAPE ARCHITECT
BARBARA M. SANTNER
355
EXP. 6-30-16
STATE OF NEVADA
8/18/15

SHEET NUMBER
L004
58 OF 90

V:\2053\Active\205300179\drawings\active\LANDSCAPE\00179_L004-006.dwg By:Araya, Allison
TMWA_MapSmono.ctb

BID SET
AUGUST 2015

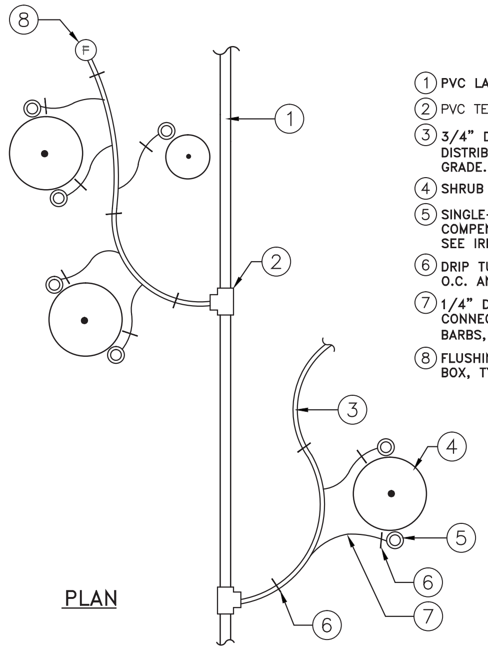

1. PVC LATERAL PIPE.
2. PVC TEE.
3. 3/4" DIA. FLEXIBLE DRIP DISTRIBUTION TUBE. 3" BELOW GRADE.
4. SHRUB ROOT BALL.
5. SINGLE-PORT, PRESSURE COMPENSATING DRIP EMITTER, SEE IRRIGATION LEGEND.
6. DRIP TUBE PIN, PLACE EVERY 5' O.C. AND AT EACH EMITTER.
7. 1/4" DRIP DISTRIBUTION TUBE CONNECTED WITH TRANSFER BARBS, 3'-0" MAXIMUM LENGTH.
8. FLUSHING END CAP IN VALVE BOX, TYPICAL.

NOTES:
1. EMITTERS SHALL BE EQUALLY SPACED AND LOCATED TO DIRECT WATER FLOW TO THE PERIMETER OF THE PLANT ROOT BALL.
2. LOCATE EMITTERS UPHILL OF PLANT CENTER.
3. USE CONNECTORS SPECIFIED BY TUBE MANUFACTURER.

PLAN

1 POINT SOURCE DRIP LAYOUT
L005 SCALE: NOT TO SCALE
PROJ-APDIA-08

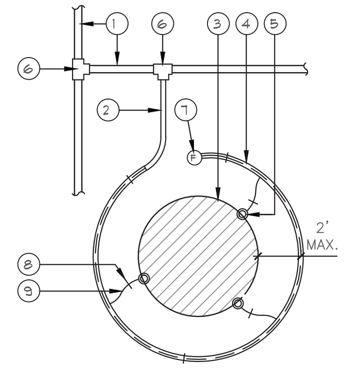

PLAN

KEY NOTES
1. PVC LATERAL PIPE.
2. EMITTER SUB-LATERAL, DRIP DISTRIBUTION TUBE, 3/4" DIA., 150' OR 200 GPH MAXIMUM FROM ANY ONE CONNECTION AT FLEXIBLE PVC.
3. TREE ROOT BALL.
4. 3/4" DRIP DISTRIBUTION TUBE.
5. SINGLE-PORT, PRESSURE COMPENSATING BARB DRIP EMITTER, PER IRRIGATION LEGEND.
6. PVC TEES, SOLVENT WELD.
7. FLUSHING END CAP IN VALVE BOX, TYPICAL.
8. DRIP TUBE PIN, PLACE EVERY 5' O.C. AND AT EACH EMITTER.
9. 1/4" DRIP DISTRIBUTION TUBE CONNECTED WITH TRANSFER BARBS, 3'-0" MAXIMUM LENGTH.

GENERAL NOTES
a. USE CONNECTORS SPECIFIED BY TUBE MANUFACTURER.
b. ANCHOR DRIP TUBE TO MAINTAIN EMITTER LOCATION IN RELATION TO PLANT, 8'-0" ON CENTER MAXIMUM.

2 DRIP EMITTER LAYOUT AT TREES
L005 SCALE: NONE
PROJ-APDIA-03

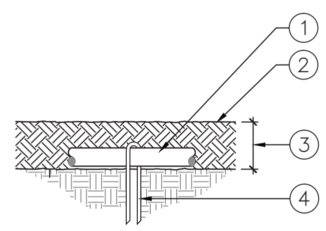

1. DRIP TUBE.
2. TOP OF MULCH.
3. MAINTAIN CONSISTENT ELEVATION.
4. JUTE MESH STAPLE AT 4' O.C. OR AS NECESSARY TO SECURE TUBING.

ELEVATION

4 DRIP TUBE STAPLING
L005 SCALE: 1 1/2" = 1'-0"
PROJ-APDIA-16

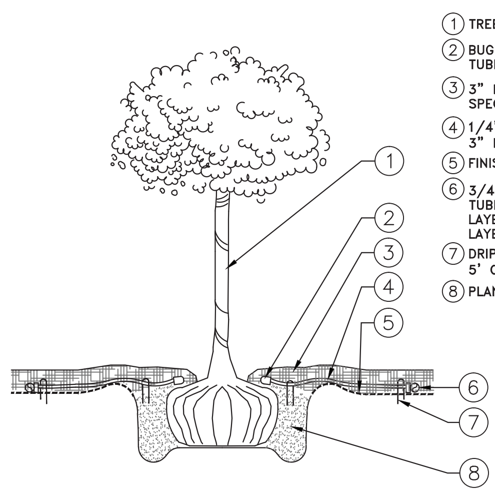

1. TREE OR SHRUB.
2. BUG CAP AT END OF DRIP TUBING, TYP.
3. 3" DEEP MULCH LAYER PER SPECIFICATIONS.
4. 1/4" DRIP TUBING, BURY 3" BELOW GRADE.
5. FINISH GRADE.
6. 3/4" DRIP DISTRIBUTION TUBING, PLACE ABOVE FABRIC LAYER AND BELOW MULCH LAYER.
7. DRIP TUBE PIN PLACED AT 5' O.C.
8. PLANT PIT.

SECTION

3 DRIP EMITTER AT PLANT (ELEVATION)
L005 SCALE: NONE
PROJ-APDIA-09

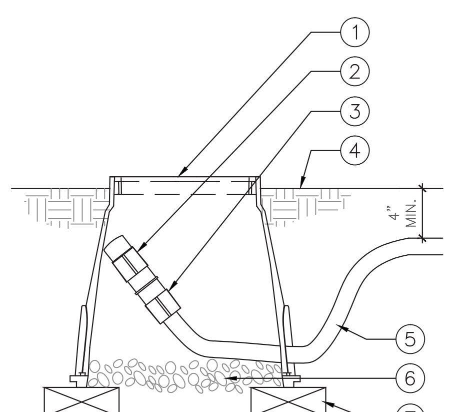

NOTES:
1. 10" ROUND VALVE BOX.
2. FLUSH CAP.
3. COUPLING.
4. FINISH GRADE: HOLD TOP OF BOX 2" ABOVE FINISH GRADE IN PLANTER AREA.
5. DRIP TUBE.
6. 4" DEEP 3/4" WASHED PEA GRAVEL.
7. BRICK, TYP. 2 PLACES.
8. ALLOW A MINIMUM OF 6" OF DRIP TUBE IN VALVE BOX IN ORDER TO DIRECT FLUSHED WATER OUTSIDE VALVE BOX

5 MANUAL FLUSH VALVE
L005 SCALE: NOT TO SCALE
PROJ-APDIA-28

IRRIGATION NOTES:

GENERAL:
1. THIS DESIGN IS DIAGRAMMATIC. ALL PIPING, VALVES, ETC., SHOWN WITHIN PAVED AREAS IS FOR DESIGN CLARIFICATION ONLY, AND SHALL BE INSTALLED IN PLANTING AREAS WHEREVER POSSIBLE. THE POINT-OF-CONNECTION SHALL BE AS INDICATED ON THE PLAN UTILIZING THE EXISTING IRRIGATION MAIN LINE.
2. THE CONTRACTOR SHALL VERIFY EXISTING SITE CONDITIONS AND ENSURE THAT ALL LOCAL CODES ARE MET.
3. THE CONTRACTOR SHALL APPLY AND PAY FOR ALL PERMITS REQUIRED FOR INSTALLATION OF THE IRRIGATION SYSTEM AS DEPICTED ON THESE PLANS.
4. CONTRACTOR SHALL VERIFY AVAILABLE FLOW AND PRESSURE DOWNSTREAM FROM THE POINT-OF-CONNECTION PRIOR TO SYSTEM INSTALLATION. CONTRACTOR SHALL NOTIFY LANDSCAPE ARCHITECT OR OWNERS REPRESENTATIVE IMMEDIATELY IF AVAILABLE FLOW IS LESS THAN REQUIRED TO RUN THE LARGEST ZONE. CONTRACTOR SHALL NOT PROCEED ANY FURTHER WITH INSTALLATION OF THE SYSTEM UNTIL NECESSARY DESIGN REVISIONS HAVE BEEN DETERMINED BY LANDSCAPE ARCHITECT. SYSTEM DESIGN BASED ON ASSUMED AVAILABLE PRESSURE OF 40 PSI. FUTURE PRESSURES MAY VARY DUE TO NEW DEVELOPMENT AND/OR OTHER UNFORESEEN CIRCUMSTANCES. LANDSCAPE ARCHITECT SHALL BEAR NO RESPONSIBILITY FOR FUTURE DEVIATIONS IN PRESSURE AND ANY RESULTING EFFECTS ON THE PERFORMANCE OF THE IRRIGATION SYSTEM.
5. THE CONTRACTOR SHALL NOT WILLFULLY INSTALL THE SPRINKLER SYSTEM AS SHOWN ON THE DRAWINGS WHEN IT IS OBVIOUS IN THE FIELD THAT UNKNOWN OBSTRUCTIONS OR DIFFERENCES IN DIMENSIONS EXIST THAT MIGHT HAVE BEEN UNKNOWN DURING ENGINEERING. SUCH OBSTRUCTIONS SHALL BE BROUGHT TO THE ATTENTION OF THE OWNER'S AUTHORIZED REPRESENTATIVE. IN THE EVENT THIS NOTIFICATION IS NOT PERFORMED, THE CONTRACTOR SHALL ASSUME FULL RESPONSIBILITY FOR ANY REVISIONS NECESSARY AT NO ADDITIONAL COST TO OWNER.
6. IT IS THE RESPONSIBILITY OF THE IRRIGATION CONTRACTOR TO FAMILIARIZE HIMSELF WITH ALL GRADE DIFFERENCES, LOCATION OF WALLS, RETAINING WALLS, STRUCTURES, AND UTILITIES. THE IRRIGATION CONTRACTOR SHALL REPAIR OR REPLACE ALL ITEMS DAMAGED BY HIS WORK. HE SHALL COORDINATE HIS WORK WITH OTHER CONTRACTORS FOR THE LOCATION AND INSTALLATION OF PIPE SLEEVES AND LATERALS THROUGH WALLS, UNDER ROADWAYS AND PAVING, ETC.
7. ALL SPRINKLER EQUIPMENT NOT OTHERWISE DETAILED OR SPECIFIED SHALL BE INSTALLED PER MANUFACTURER'S RECOMMENDATIONS AND SPECIFICATIONS.
8. CONTRACTOR SHALL COORDINATE THE INSTALLATION OF ALL IRRIGATION MATERIALS, INCLUDING PIPE, WITH THE LANDSCAPE DRAWINGS TO AVOID INTERFERING WITH THE PLANTING OF TREES, SHRUBS, OR OTHER PLANTINGS.
9. ALL VALVES ARE TO BE LOCATED IN PLANTING AREAS WHEREVER POSSIBLE. THE IRRIGATION CONTRACTOR SHALL FLUSH ALL EMITTER LATERALS AND TUBING PRIOR TO INSTALLATION OF EMITTER HEADS.
10. ALL ELECTRICAL WIRE FROM CONTROLLER TO VALVES SHALL BE 14 GAUGE UL DIRECT BURIAL OR LARGER AS REQUIRED BY LENGTH PER MANUFACTURER'S SPECIFICATIONS.
11. BACKFILL FOR TRENCHING, AFTER SAND BEDDING, SHALL BE COMPACTED TO A DRY DENSITY EQUAL TO THE UNDISTURBED ADJACENT SOIL AND SHALL CONFORM TO ADJACENT GRADES WITHOUT DIPS, HUMPS, OR OTHER IRREGULARITIES.
12. A MINIMUM OF TWO WORKING DAYS PRIOR TO PERFORMING ANY DIGGING, CALL UNDERGROUND SERVICE ALERT AT 1-800-642-2444 FOR INFORMATION ON THE LOCATION OF NATURAL GAS LINES, ELECTRICAL CABLES, TELEPHONE CABLES, ETC.
13. CONTRACTOR AGREES THAT, IN ACCORDANCE WITH GENERALLY ACCEPTED CONSTRUCTION PRACTICES, CONTRACTOR WILL BE REQUIRED TO ASSUME SOLE AND COMPLETE RESPONSIBILITY FOR JOB SITE CONDITIONS DURING THE COURSE OF CONSTRUCTION OF THE PROJECT, INCLUDING SAFETY OF ALL PERSONS AND PROPERTY. THIS REQUIREMENT SHALL APPLY CONTINUOUSLY AND SHALL NOT BE LIMITED TO NORMAL WORKING HOURS.
14. INSTALL ALL PIPE AND CONTROL WIRES IN LANDSCAPE BEDS AND IN COMMON TRENCHES WHEREVER POSSIBLE. 120 VAC ELECTRICAL POWER SOURCE AT CONTROLLER LOCATION SHALL BE PROVIDED BY OTHERS. THE IRRIGATION CONTRACTOR SHALL COORDINATE HIS WORK WITH THE ELECTRICAL CONTRACTOR TO ASSURE IRRIGATION SYSTEM IS FULLY FUNCTIONING BEFORE PLANTING OR SEEDING COMMENCES. THE IRRIGATION CONTRACTOR SHALL BE RESPONSIBLE TO MAKE THE FINAL CONNECTION FROM THE ELECTRICAL SOURCE TO THE CONTROLLER.
15. ALL PIPING AND CONTROL WIRES UNDER PAVING SHALL BE INSTALLED IN SEPARATE SLEEVES. ALL STREET CROSSINGS SHALL HAVE MINIMUM OF 2 SLEEVES. INSIDE DIAMETER OF SLEEVE SIZE SHALL BE A MINIMUM OF TWICE (2X) THE OUTSIDE DIAMETER OF THE PIPE TO BE SLEEVED. ALL CONTROL WIRE SLEEVES SHALL BE OF SUFFICIENT SIZE FOR THE REQUIRED NUMBER OF WIRES UNDER PAVING. ALL SLEEVES SHALL BE IDENTIFIED ABOVE GROUND BY PRESSING 90 DEGREE FITTINGS ON TO THE SLEEVE ENDS AND EXTENDING THE PVC PIPE UPWARDS 18" ABOVE GRADE. THESE PIPES SHALL BE CAPPED. EXTEND ALL WIRES AND PIPES TO LIMITS OF WORK FOR FUTURE PHASES IF INDICATED. OWNER'S REPRESENTATIVE SHALL OVERSEE PLACEMENT AND SIZE OF CONTROLLERS FOR ENTIRE PROJECT.

FLUSHING AND TESTING:
16. CONTRACTOR SHALL BE RESPONSIBLE TO PROVIDE FOR COMPLETE DRAINAGE OF THE MAINLINES BY INSTALLING MANUAL DRAINS AS INDICATED ON PLAN AND AT ALL SYSTEM LOW POINTS. PIPE SIZES SHALL CONFORM TO THOSE SHOWN ON THE DRAWINGS. NO SUBSTITUTIONS OF SMALLER PIPE SIZES SHALL BE PERMITTED, BUT SUBSTITUTIONS OF LARGER SIZES MAY BE APPROVED. ALL DAMAGED AND REJECTED PIPE SHALL BE REMOVED FROM THE SITE AT THE TIME OF SAID REJECTION. FINAL LOCATION OF THE AUTOMATIC CONTROLLER SHALL BE APPROVED BY OWNER'S AUTHORIZED REPRESENTATIVE.
16. PIPING SHALL BE COMPLETELY FLUSHED OF FOREIGN PARTICLES BEFORE ATTACHING IRRIGATION COMPONENTS AND DRAIN VALVES.
17. AFTER FLUSHING, AND WHEN ALL VALVES AND QUICK COUPLERS ARE IN PLACE, ALL MAIN SUPPLY LINES SHALL BE TESTED AT 100 POUNDS PER SQUARE INCH (100 PSI) WITH VALVES CLOSED. MAINTAIN PRESSURE FOR A PERIOD OF NOT LESS THAN (4) CONSECUTIVE HOURS. ALL JOINTS SHOWING LEAKS SHALL BE CLEANED, REMADE, AND TESTED.
18. AFTER FLUSHING, LATERAL PIPES SHALL BE TESTED WITH RISERS CAPPED AND DRAIN VALVES CLOSED. THE TEST SHALL BE MADE AT MAXIMUM OPERATING PRESSURE FOR A PERIOD OF NOT LESS THAN (1) HOUR. ALL JOINTS SHOWING LEAKS SHALL BE CLEANED, REMADE, AND TESTED. ALL TESTING SHALL BE DONE IN THE PRESENCE OF THE OWNER'S REPRESENTATIVE PRIOR TO BACKFILLING OVER PIPING.
19. CONTRACTOR TO CONTACT TMWA REPRESENTATIVE J. THOMAS AT (775)750-9095 OR D. DOURTE AT (775)240-3449 FOR OPEN TRENCH OBSERVATION OF ALL BELOW GROUND ITEMS PRIOR TO BACK FILL.
20. OPERATIONAL TESTING: PERFORM OPERATIONAL TESTING AFTER HYDROSTATIC TESTING IS COMPLETED. DEMONSTRATE TO THE LANDSCAPE ARCHITECT OR OWNERS REPRESENTATIVE THAT THE SYSTEM MEETS COVERAGE REQUIREMENTS (100%) AND THAT AUTOMATIC CONTROLS FUNCTION PROPERLY.
21. AFTER COMPLETION OF CONSTRUCTION CAREFULLY ADJUST EMITTERS FOR FULL COVERAGE.

SUBMITTALS:
22. MATERIALS LIST: WITHIN (15) DAYS AFTER AWARD OF CONTRACT, SUBMIT TO LANDSCAPE ARCHITECT OR OWNERS REPRESENTATIVE (3) COPIES OF A COMPLETE MATERIALS LIST (PARTIAL LIST NOT ACCEPTABLE) OF ALL MATERIALS TO BE USED ON THE PROJECT, SPECIFYING MANUFACTURER, GRADE, TRADE NAME, CATALOG NUMBER, SIZE, ETC. THIS SHALL IN NO WAY BE CONSTRUED AS ALLOWING A SUBSTITUTION FOR ANY ITEM SPECIFIED ON THE PLANS. EQUIPMENT OR MATERIALS INSTALLED OR FURNISHED WITHOUT THE PRIOR WRITTEN APPROVAL OF THE LANDSCAPE ARCHITECT MAY BE REJECTED AND THE CONTRACTOR REQUIRED TO REMOVE THE MATERIALS AT HIS OWN EXPENSE.
23. INSTALLATION AND PERFORMANCE OF APPROVED SUBSTITUTIONS ARE THE CONTRACTOR'S RESPONSIBILITY. ANY CHANGES REQUIRED FOR INSTALLATION OF ANY APPROVED SUBSTITUTION MUST BE MADE TO THE SATISFACTION OF THE LANDSCAPE ARCHITECT OR OWNERS REPRESENTATIVE WITHOUT ADDITIONAL COST TO OWNER.
24. PRIOR TO SYSTEM INSTALLATION CONTRACTOR SHALL VERIFY AND SUBMIT TO LANDSCAPE ARCHITECT IN WRITING, AVAILABLE FLOW AND PRESSURE AT POINT-OF-CONNECTION AS DESCRIBED IN SPECIFICATION #4 ABOVE.
25. COMPLETE WARRANTY CARDS FOR AUTOMATIC CONTROLLER AND OTHER IRRIGATION MATERIAL (CONTROLLER KEYS, ETC.) SHALL BE DELIVERED TO THE LANDSCAPE ARCHITECT AT FINAL PROJECT WALK-THROUGH.
26. CONTRACTOR SHALL PREPARE AND ISSUE TO THE OWNER (AT COMPLETION OF THE INSTALLATION) AN ANNUAL CHART INDICATING LOCATION, OPERATING DATES, CYCLES, AND TIME FOR EACH ZONE.
27. AS-BUILT IRRIGATION DRAWINGS: CONTRACTOR SHALL FURNISH AS-BUILTS OF THE COMPLETE IRRIGATION SYSTEM. PROCURE FROM LANDSCAPE ARCHITECT FULL-SIZED SEPIAS OF CONTRACT DRAWINGS. CONSTRUCTION DRAWINGS SHALL BE ON THE CONSTRUCTION SITE AT ALL TIMES WHILE THE IRRIGATION SYSTEM IS BEING INSTALLED. CONTRACTOR SHALL MAKE A DAILY RECORD OF ALL WORK INSTALLED DURING EACH DAY. ACTUAL LOCATION OF VALVES AND ALL IRRIGATION AND DRAINAGE PIPING SHALL BE SHOWN ON THE PRINTS BY DIMENSIONS FROM EASILY IDENTIFIED PERMANENT FEATURES, SUCH AS BUILDINGS, CURBS, FENCES, WALKS OR PROPERTY LINES. DRAWINGS SHALL SHOW APPROVED MANUFACTURER'S NAME AND CATALOG NUMBER. THE DRAWINGS SHALL BE TO SCALE AND ALL INDICATIONS SHALL BE NEAT. ALL INFORMATION NOTED ON THE PRINT SHALL BE TRANSFERRED TO THE COPIES BY CONTRACTOR AND ALL INDICATIONS SHALL BE RECORDED IN A NEAT, ORDERLY WAY. RECORD SEPIAS SHALL BE TURNED OVER TO THE LANDSCAPE ARCHITECT AT OR BEFORE FINAL ACCEPTANCE/APPROVAL OF THE PROJECT.

GUARANTEE / FINAL ACCEPTANCE
28. CONTRACTOR SHALL UNCONDITIONALLY GUARANTEE THE IRRIGATION SYSTEM FOR A PERIOD OF ONE YEAR FROM THE DATE OF FINAL ACCEPTANCE. MANUFACTURER WARRANTIES SHALL NOT SUPERSEDE THIS GUARANTEE AS CONTRACTOR SHALL BE FULLY LIABLE FOR REPAIRS/REPLACEMENT OF FAILED MATERIALS/WORKMANSHIP.

ENTIRE SHEET ⚠1

REVISION	DESCRIPTION	BY	APP	DATE
1	ADDENDUM #2	BMS	BMS	8/26/15

WORK ORDER NO. 10-0002
DESIGNED BMS
DRAWN CJA
DATE AUGUST 2015
CHECKED
SUBMITTED
RECOMMENDED
APPROVED

TRUCKEE MEADOWS WATER AUTHORITY
1355 CAPITAL BLVD. / PO BOX 30013
RENO, NEVADA 89520-3013
PH 775-834-8080 / FX 775-834-8003

NOT REPRODUCIBLE
PROPERTY OF TRUCKEE MEADOWS WATER AUTHORITY, RETURN UPON COMPLETION OF PROJECT
(Per Homeland Security Act)

TMWA ARROWCREEK DROUGHT RESPONSE DESIGN PROJECT
IRRIGATION DETAILS & NOTES

REGISTERED LANDSCAPE ARCHITECT BARBARA M. SANTNER 355 STATE OF NEVADA EXP. 6.30.16 8/18/15

SHEET NUMBER
L005
59 OF 90

V:\2053\Active\205300179\drawings\active\LANDSCAPE\00179_L004-006.dwg By:Araya, Allison
TMWA_Map5mono.ctb

BID SET
AUGUST 2015

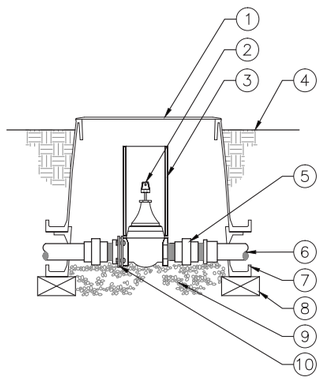

1. PLASTIC VALVE BOX AND LOCKING COVER W/ BOX EXTENSIONS AS REQUIRED. REFER TO SPECS. HEAT BRAND 'GV' ON LID.
2. ISOLATION CURB STOP VALVE.
3. 6" PVC SLEEVE.
4. FINISH GRADE.
5. PVC UNION, BOTH SIDES OF VALVE.
6. MAIN LINE.
7. BOX EXTENSIONS, AS REQUIRED.
8. STANDARD BRICK IN 3 PLACES.
9. 6" DEPTH OF PEA GRAVEL.
10. METAL FLANGE TO MATCH VALVE MATERIAL FOR 2½" SIZE AND LARGER.

NOTES:
1. INSTALL GATE VALVES A MIN. OF 24" FROM STRUCTURES OR HARDSCAPING.
2. REFER TO SPECS. AND PLAN SHEETS FOR MORE INFORMATION.

1 ISOLATION VALVE
L006 SCALE: 1" = 1'-0"

PROJ-APDIA-01

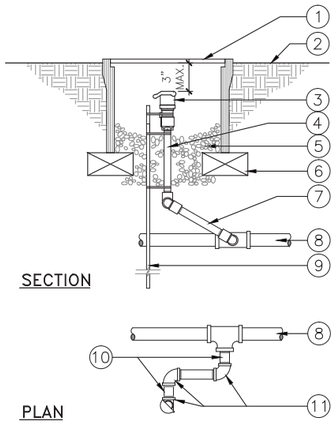

1. PLASTIC VALVE BOX W/ LOCK BOLT. HEAT BRAND VALVE NUMBER ON LID.
2. FINISH GRADE.
3. QUICK COUPLING VALVE.
4. 80 PVC NIPPLE.
5. 6" DEPTH OF PEA GRAVEL.
6. STANDARD BRICK IN 2 PLACES.
7. SCH. 80 PVC 6" LONG NIPPLE.
8. PVC MAIN LINE.
9. 2"X2"X1/40" ANGLE IRON (36" LONG) W/ STAINLESS STEEL SCREW CLAMPS MIN. (3) PLACES.
10. SCH. 80 NIPPLE.
11. SCH. 80 PVC 90° ELL.

2 QUICK COUPLING VALVE
L006 SCALE: 1 1/2" = 1'-0"

PROJ-INWELL-03

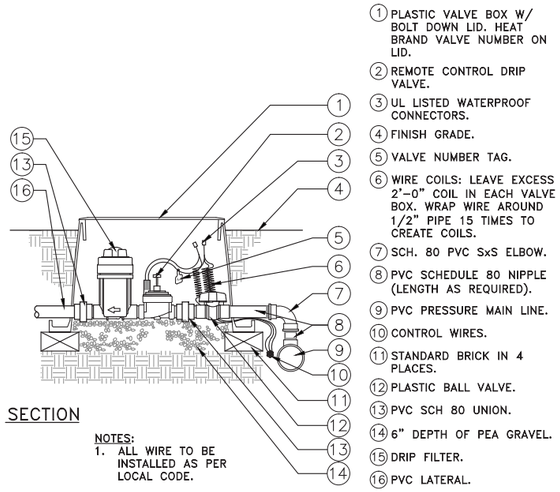

1. PLASTIC VALVE BOX W/ BOLT DOWN LID. HEAT BRAND VALVE NUMBER ON LID.
2. REMOTE CONTROL DRIP VALVE.
3. UL LISTED WATERPROOF CONNECTORS.
4. FINISH GRADE.
5. VALVE NUMBER TAG.
6. WIRE COILS: LEAVE EXCESS 2'-0" COIL IN EACH VALVE BOX. WRAP WIRE AROUND 1/2" PIPE 15 TIMES TO CREATE COILS.
7. SCH. 80 PVC SxS ELBOW.
8. PVC SCHEDULE 80 NIPPLE (LENGTH AS REQUIRED).
9. PVC PRESSURE MAIN LINE.
10. CONTROL WIRES.
11. STANDARD BRICK IN 4 PLACES.
12. PLASTIC BALL VALVE.
13. PVC SCH 80 UNION.
14. 6" DEPTH OF PEA GRAVEL.
15. DRIP FILTER.
16. PVC LATERAL.

NOTES:
1. ALL WIRE TO BE INSTALLED AS PER LOCAL CODE.

3 DRIP REMOTE CONTROL VALVE
L006 SCALE: 1" = 1'-0"

PROJ-APDIA-07

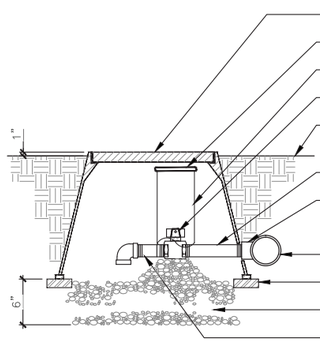

1. 14" x 19" PLASTIC VALVE BOX W/ BOLT DOWN COVER, REFER TO SPECS.
2. 6" TORO CAP.
3. 6" SDR 35 PIPE RISER.
4. MANUAL DRAIN VALVE, WATTS 3/4" CROSSTOP BRASS INLINE W/ RISING STEM AND 90° MARLEX STREET ELL.
5. FINISH GRADE BEFORE PLANTING.
6. PVC SCH 80 THREADED NIPPLE.
7. PVC SCH 80 MAINLINE T.
8. STD. BRICK AT 4 CORNERS.
9. 3/4" DIA. DRAIN ROCK. PLACE PRIOR TO INSTALLATION OF VALVE BOX.
10. PVC MAIN LINE.
11. PLACE VALVE BOX AT RIGHT ANGLES TO AND A MIN. OF 12" FROM STRUCTURES OR HARDSCAPING.
12. INSTALL AT ALL LOW POINTS IN MAIN LINE IN PLANTING BEDS WHEREVER POSSIBLE.

4 MAIN LINE MANUAL DRAIN VALVE
L006 SCALE: 1" = 10'

PROJ-APDIA-05

STEP 1: STRIP WIRES 1/2" FROM ENDS.

STEP 2: APPLY SCOTCHLOK Y SPRING CONNECTOR IN A CLOCKWISE DIRECTION.

STEP 3: INSERT SPLICE TO BOTTOM OF GEL-FILLED TUBE. CHECK TO MAKE SURE CONNECTOR HAS BEEN PUSHED PAST LOCKING FINGERS AND IS SEATED AT BOTTOM OF TUBE.

STEP 4: POSITION WIRES IN WIRE CHANNELS AND CLOSE INSULATOR TUBE COVER.

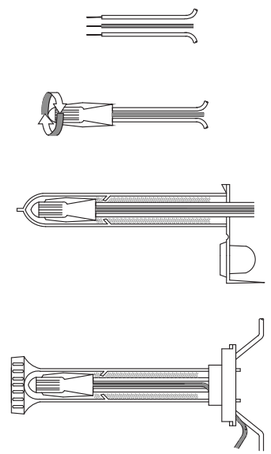

5 ELECTRICAL WIRING CONNECTOR KIT
L006 SCALE: NOT TO SCALE

PROJ-APDIA-04

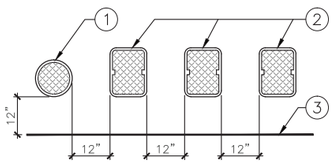

1. ROUND VALVE BOX
2. RECTANGULAR VALVE BOX
3. EDGE OF PLANTER

NOTES:
1. CENTER VALVE BOXES DIRECTLY OVER VALVES TO FACILITATE SERVICING.
2. FINISH GRADE AROUND BOXES TO BE KEPT BELOW VALVE BOX LID:
   - 1/2" IN SEED
   - 1-1/2" IN SOD
   - 3" IN PLANTER BED
3. SET VALVES IN GROUNDCOVER/SHRUB AREAS WHENEVER POSSIBLE. INSTALL IN TURF ONLY IF GROUND COVER DOES NOT EXIST ADJACENT TO TURF.
4. SET BOXES PARALLEL TO EACH OTHER AND PERPENDICULAR TO EDGE.
5. AVOID HEAVILY COMPACTING SOIL AROUND VALVE BOXES TO PREVENT COLLAPSE OR DEFORMATION OF VALVE BOX SIDES.

6 VALVE BOX LAYOUT
L006 SCALE: 1/2" = 1'-0"

PROJ-APDIA-06

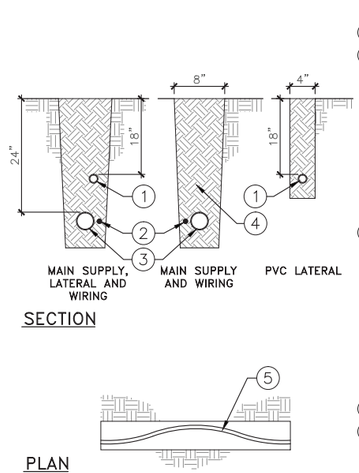

1. IRRIGATION LATERAL PIPE.
2. WIRING: TAPE AND BUNDLE WIRING AT 10'-0" INTERVALS. COMMON TRENCHING OF IRRIGATION PIPE AND REMOTE CONTROL VALVE WIRING TO BE DONE WHERE POSSIBLE (INSTALL TRACE WIRE ALONG ALL MAIN LINE PIPE THAT DOES NOT HAVE CONTROL WIRES ADJACENT TO PIPE).
3. MAIN LINE: ALL MAIN LINE TO BE INSTALLED IN ACCORDANCE WITH MANUFACTURER'S SPECIFICATIONS. MAINTAIN MIN. 4" SPACE BETWEEN PARALLEL PIPE LINES AND 6" VERTICAL SPACE BETWEEN MAIN LINE AND LATERAL LINES. WIRING AND MAIN LINE TO BE AT SAME MIN. DEPTH OF 24".
4. BACKFILL.
5. ALL PVC PIPE TO BE SNAKED IN TRENCHED AS SHOWN.

NOTES:
1. ALL PIPING UNDER PAVING SHALL BE SLEEVED.

7 TRENCHING
L006 SCALE: NOT TO SCALE

PROJ-APDIA-1A

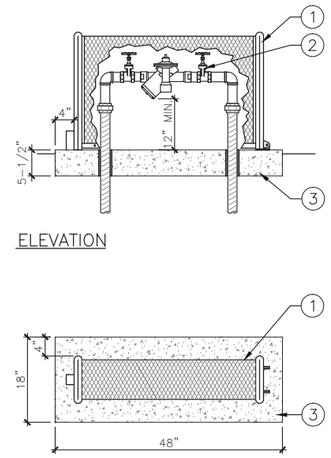

1. GUARDSHACK ENCLOSURE MODEL GS-3 WITH FROST GUARD FG-3, MOUNTED TO CONCRETE PAD. INSTALL PER MANUFACTURER'S RECOMMENDATIONS.
2. REDUCED PRESSURE BACKFLOW PREVENTION ASSEMBLY, SEE 10A-2/TYP.
3. CONCRETE PAD. CROWN TO DRAIN AND FLOAT FINISH. HEIGHT OF TOP OF PAD ABOVE GRADE SHALL BE DETERMINED BY OWNER.

NOTE:
GUARDSHACK ENCLOSURE TO BE POWDER COATED WOODLAND TAN OR FOREST GREEN (OR APPROVED EQUAL) TO BE DETERMINED BY OWNER.

8 GUARDSHACK CAGE COVER
L006 SCALE: NONE

DETAIL-FILE

ENTIRE SHEET 1

REVISION	DESCRIPTION	BY	APP	DATE
1	ADDENDUM #2	BMS	BMS	8/26/15

WORK ORDER NO. 10-0002
DESIGNED BMS
DRAWN CJA
DATE AUGUST 2015
CHECKED
SUBMITTED
RECOMMENDED
APPROVED

TRUCKEE MEADOWS WATER AUTHORITY
1355 CAPITAL BLVD. / PO BOX 30013
RENO, NEVADA 89520-3013
PH 775-834-8080 / FX 775-834-8003

NOT REPRODUCIBLE
PROPERTY OF TRUCKEE MEADOWS WATER AUTHORITY, RETURN UPON COMPLETION OF PROJECT
(Per Homeland Security Act)

TMWA ARROWCREEK DROUGHT RESPONSE DESIGN PROJECT

IRRIGATION DETAILS

REGISTERED LANDSCAPE ARCHITECT BARBARA M. SANTNER 355 EXP. 6-30-16 STATE OF NEVADA
8/15/15

SHEET NUMBER
L006
60 OF 90

V:\20531\Active\20530017P\draw\fig\Cad\tw\LANDSCAPE\L00179_L004-006.dwg By:Arroyo, Allison

TMWA_MapSmono.ctb

BID SET
AUGUST 2015

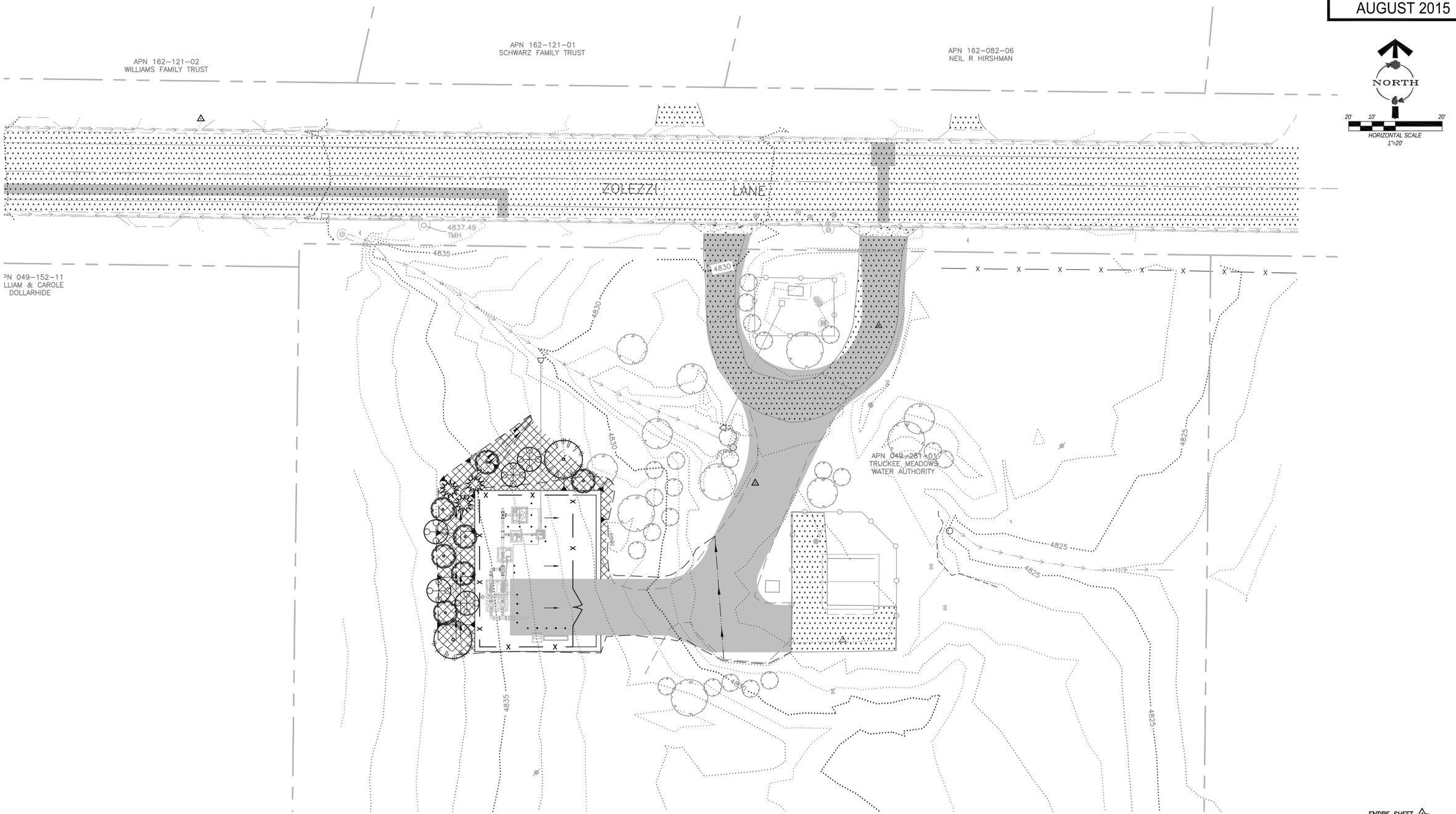

ENTIRE SHEET 1

REVISION	DESCRIPTION	BY	APP	DATE
1	ADDENDUM #2	BMS	BMS	8/26/15

WORK ORDER NO. 10-0002
DESIGNED BMS
DRAWN CJA
DATE AUGUST 2015
CHECKED
SUBMITTED
RECOMMENDED
APPROVED

TRUCKEE MEADOWS WATER AUTHORITY
1355 CAPITAL BLVD. / PO BOX 30013
RENO, NEVADA 89520-3013
PH 775-834-8080 / FX 775-834-8003

NOT REPRODUCIBLE
PROPERTY OF
TRUCKEE MEADOWS WATER
AUTHORITY, RETURN UPON
COMPLETION OF PROJECT
(Per Homeland Security Act)

TMWA ARROWCREEK DROUGHT RESPONSE DESIGN PROJECT

NEW ZOLEZZI LANE BPS PLANTING PLAN

REGISTERED LANDSCAPE ARCHITECT
BARBARA M. SANTINGER
355
EXP. 6-30-16
STATE OF NEVADA
8/18/15

SHEET NUMBER
L400
61 OF 90

V:\2533\Active\253301179\drawings\active\LANDSCAPE\001179_L400.dwg By:Arroyo, Allison

BID SET
AUGUST 2015

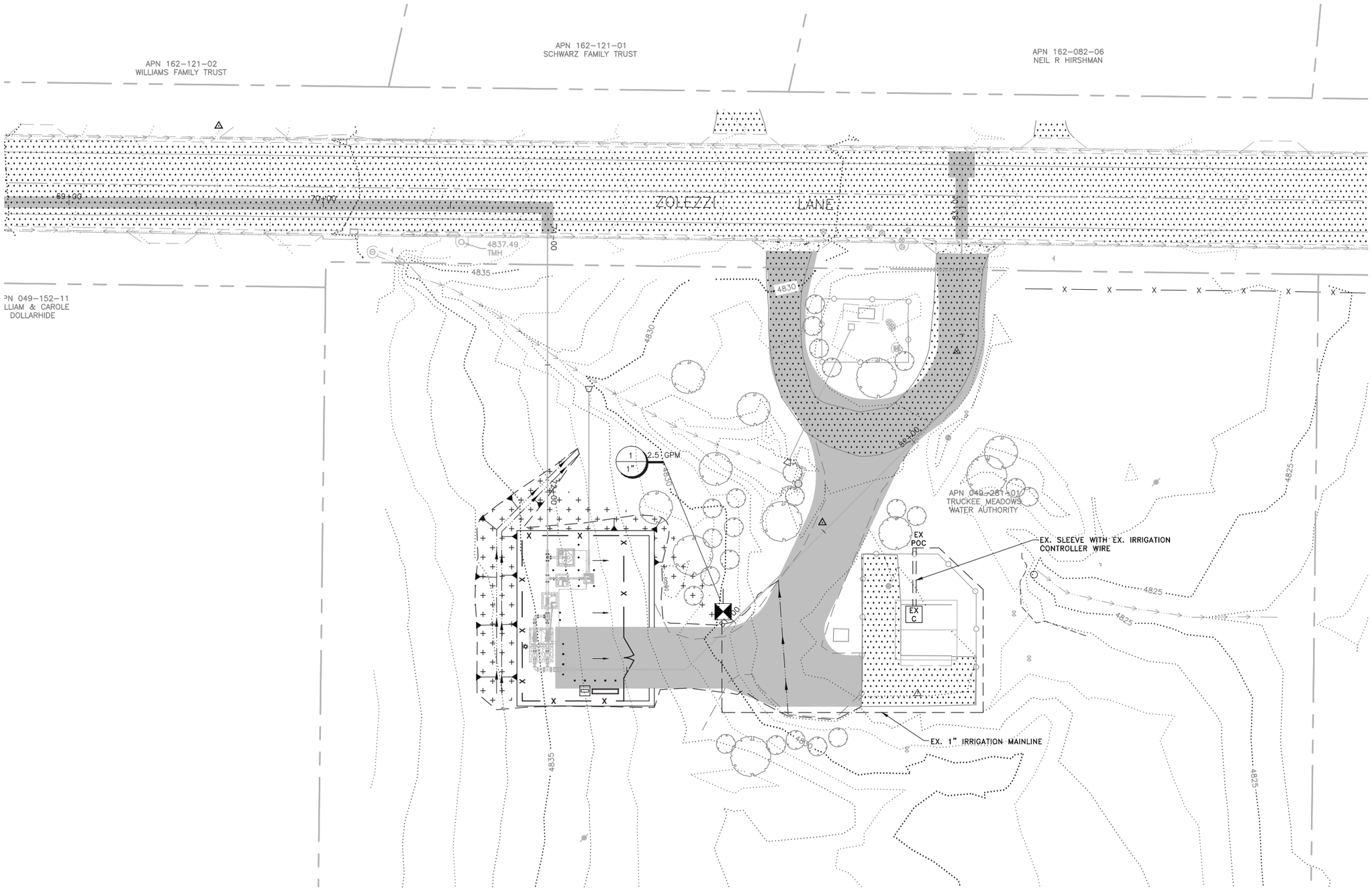

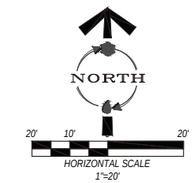

NOTES:

1. INSTALL NEW DRIP VALVE ON EXISTING IRRIGATION MAINLINE, WIRE TO EXISTING IRRIGATION CONTROLLER THROUGH EXISTING SLEEVE WITH WIRING.

ENTIRE SHEET 1

REVISION	DESCRIPTION	BY	APP	DATE
1	ADDENDUM #2	BMS	BMS	8/26/15

WORK ORDER NO. 10-0002
DESIGNED BMS
DRAWN CJA
DATE AUGUST 2015
CHECKED
SUBMITTED
RECOMMENDED
APPROVED

TRUCKEE MEADOWS WATER AUTHORITY
1355 CAPITAL BLVD. / PO BOX 30013
RENO, NEVADA 89520-3013
PH 775-834-8080 / FX 775-834-8003

NOT REPRODUCIBLE
PROPERTY OF TRUCKEE MEADOWS WATER AUTHORITY, RETURN UPON COMPLETION OF PROJECT
(Per Homeland Security Act)

TMWA ARROWCREEK DROUGHT RESPONSE DESIGN PROJECT

NEW ZOLEZZI LANE BPS IRRIGATION PLAN

REGISTERED LANDSCAPE ARCHITECT
BARBARA M. SANTNER
355
EXP. 6-30-16
STATE OF NEVADA
8/18/15

SHEET NUMBER
L401
62 OF 90

V:\2053\Active\205300179\drawings\active\LANDSCAPE\00179_L401.dwg By:Araya, Allison

BID SET
AUGUST 2015

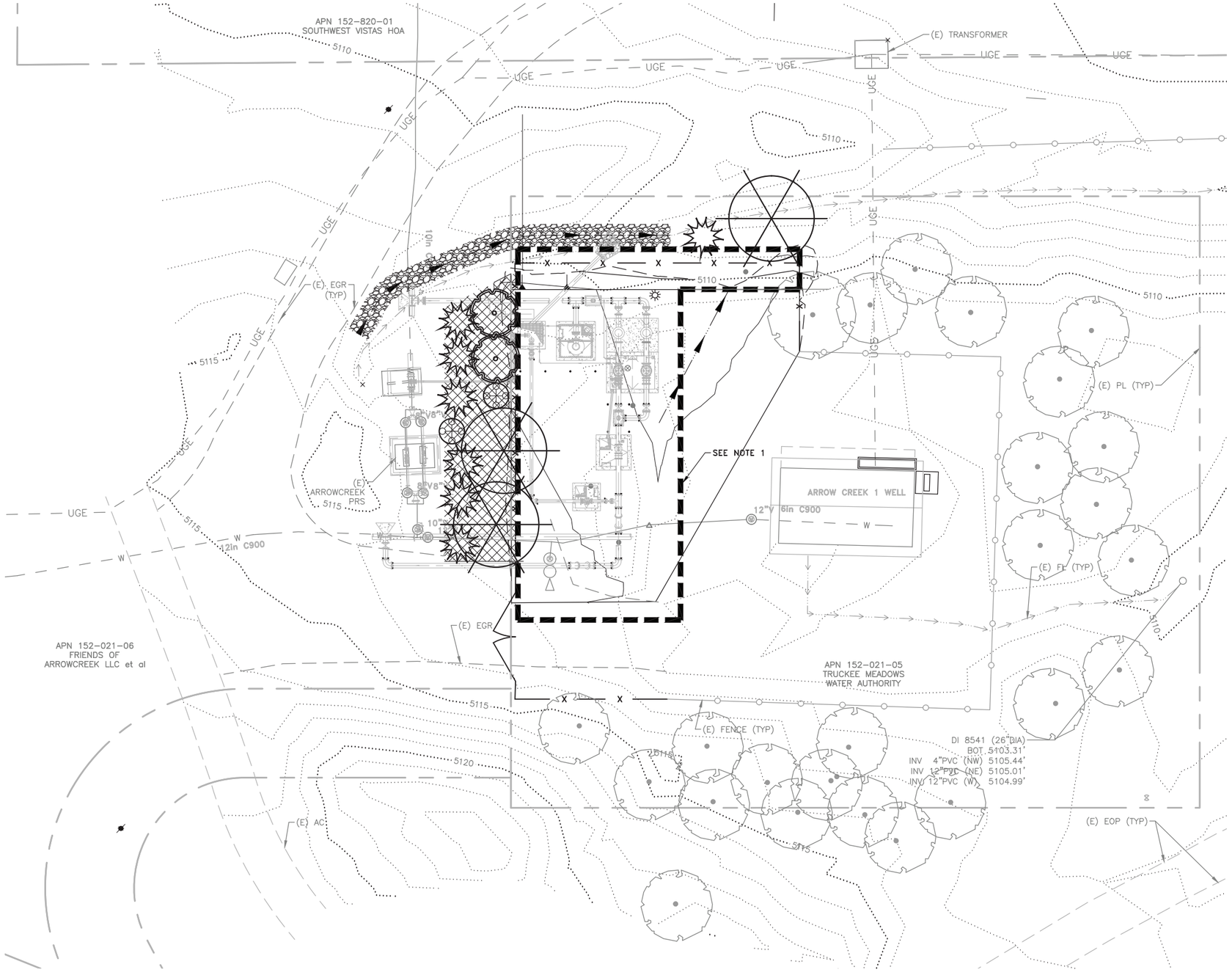

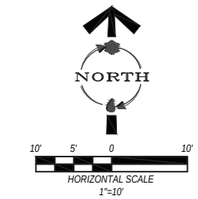

NOTES:
1. EXISTING TREES AND SHRUBS TO BE REMOVED WITHIN NEW SITE LIMITS.

ENTIRE SHEET 1

REVISION	DESCRIPTION	BY	APP	DATE
1	ADDENDUM #2	BMS	BMS	8/26/15

WORK ORDER NO. 10-0002
DESIGNED BMS
DRAWN CJA
DATE AUGUST 2015
CHECKED
SUBMITTED
RECOMMENDED
APPROVED

TRUCKEE MEADOWS WATER AUTHORITY
1355 CAPITAL BLVD. / PO BOX 30013
RENO, NEVADA 89520-3013
PH 775-834-8080 / FX 775-834-8003

NOT REPRODUCIBLE
PROPERTY OF TRUCKEE MEADOWS WATER AUTHORITY, RETURN UPON COMPLETION OF PROJECT
(Per Homeland Security Act)

TMWA ARROWCREEK DROUGHT RESPONSE DESIGN PROJECT

ARROWCREEK BPS PLANTING PLAN

REGISTERED LANDSCAPE ARCHITECT
BARBARA M. SANTNER
355
EXP. 6-30-16
STATE OF NEVADA
8/18/15

SHEET NUMBER
L600
63 OF 90

V:\2053\Active\205300179\drawings\active\LANDSCAPE\00179_L600.dwg By:Araya, Allison

BID SET
AUGUST 2015

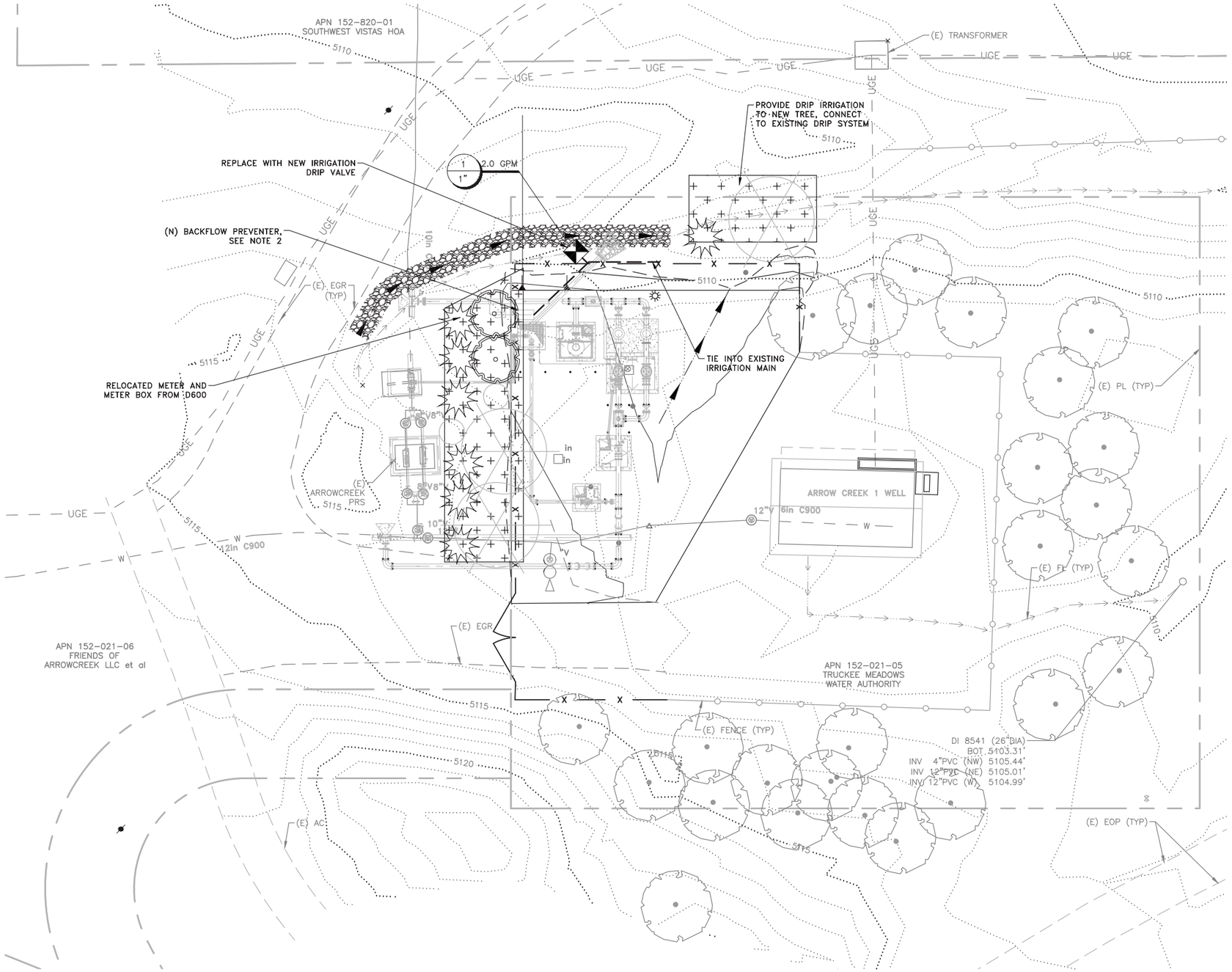

NORTH

NOTES:
1. INSTALL NEW IRRIGATION DRIP VALVE TO REPLACE EXISTING VALVE. CONNECT TO EXISTING CONTROLLER.
2. SEE IRRIGATION BACKFLOW DETAIL 10A-3/TYP FOR BACKFLOW ASSEMBLY AT NEW IRRIGATION POINT OF CONNECTION.
3. CONNECT EXISTING DRIP TUBING TO NEW DRIP VALVE.

ENTIRE SHEET 1

REVISION	DESCRIPTION	BY	APP	DATE
1	ADDENDUM #2	BMS	BMS	8/26/15

WORK ORDER NO. 10-0002
DESIGNED BMS
DRAWN CJA
DATE AUGUST 2015
CHECKED
SUBMITTED
RECOMMENDED
APPROVED

TRUCKEE MEADOWS WATER AUTHORITY
1355 CAPITAL BLVD. / PO BOX 30013
RENO, NEVADA 89520-3013
PH 775-834-8080 / FX 775-834-8003

NOT REPRODUCIBLE
PROPERTY OF TRUCKEE MEADOWS WATER AUTHORITY, RETURN UPON COMPLETION OF PROJECT
(Per Homeland Security Act)

TMWA ARROWCREEK DROUGHT RESPONSE DESIGN PROJECT

ARROWCREEK BPS IRRIGATION PLAN

REGISTERED LANDSCAPE ARCHITECT
BARBARA M. SANTNER
355
EXP. 6-30-16
STATE OF NEVADA
8/18/15

SHEET NUMBER
L601
64 OF 90

V:\2053\Active\205300179\drawings\active\LANDSCAPE\00179_L601.dwg By:Araya, Allison

BID SET
AUGUST 2015

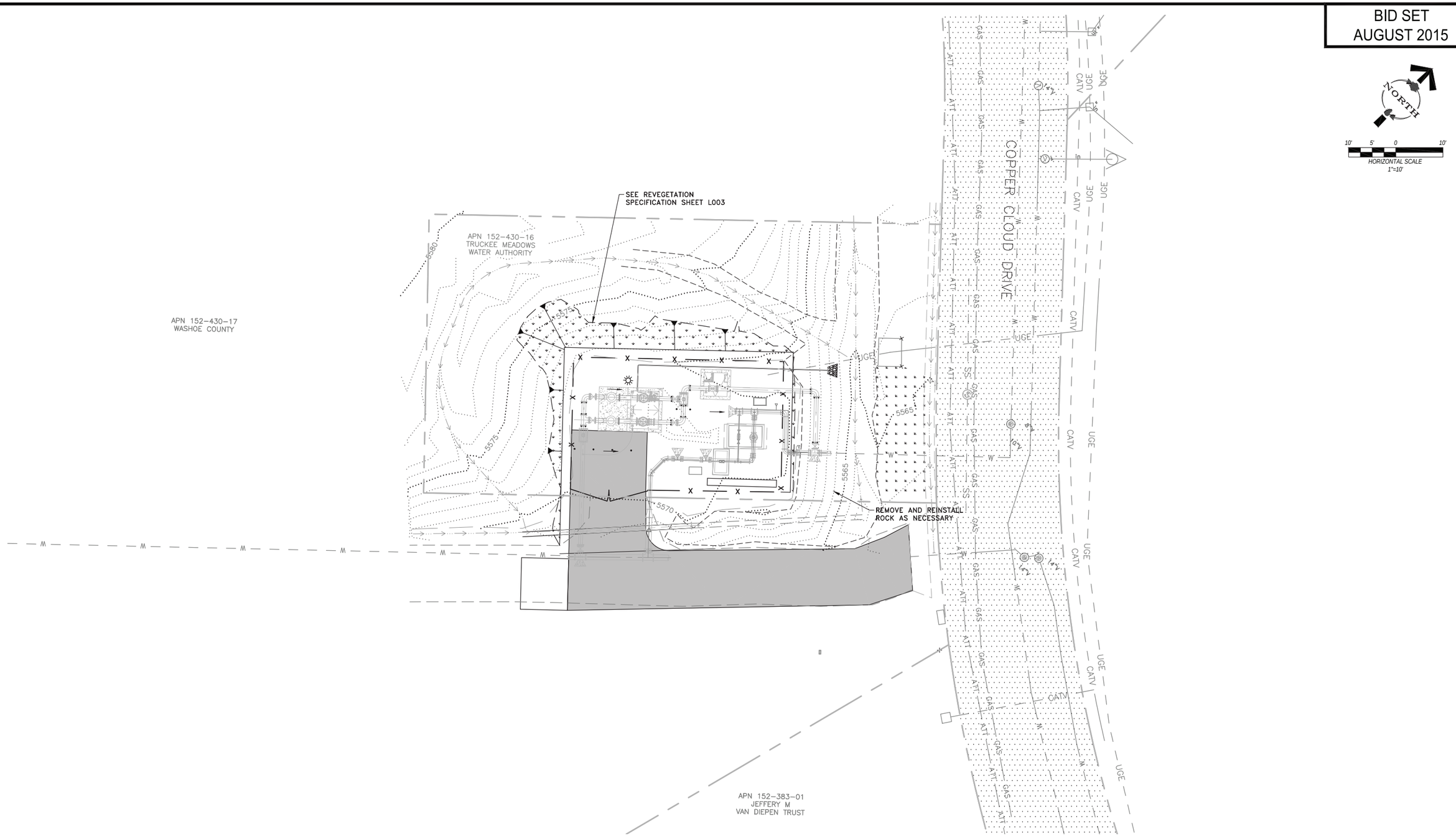

ENTIRE SHEET 1

REVISION	DESCRIPTION	BY	APP	DATE
1	ADDENDUM #2	BMS	BMS	8/26/15

WORK ORDER NO. 10-0002
DESIGNED BMS
DRAWN CJA
DATE AUGUST 2015
CHECKED
SUBMITTED
RECOMMENDED
APPROVED

TRUCKEE MEADOWS WATER AUTHORITY
1355 CAPITAL BLVD. / PO BOX 30013
RENO, NEVADA 89520-3013
PH 775-834-8080 / FX 775-834-8003

NOT REPRODUCIBLE
PROPERTY OF TRUCKEE MEADOWS WATER AUTHORITY, RETURN UPON COMPLETION OF PROJECT
(Per Homeland Security Act)

TMWA ARROWCREEK DROUGHT RESPONSE DESIGN PROJECT

COPPER CLOUD BPS PLANTING PLAN

REGISTERED LANDSCAPE ARCHITECT
BARBARA M. SANTINI
355
Exp 6-30-16
STATE OF NEVADA
8/26/15

SHEET NUMBER
L700
65 OF 90

V:\20535\Active\20530017P\drawings\civil\LANDSCAPE\L00179_L700.dwg By:Arroyo, Allison